HXR-NX5C/NX5E/NX5J/NX5M/NX5N/NX5P/NX5U

RMT-845

SERVICE MANUAL

US Model
Canadian Model
AEP Model
E Model
Chinese Model
Japanese Model

Ver. 1.1 2010.01

Revised-1

Replace the previously issued SERVICE MANUAL 9-852-737-11 with this Manual.

Photo: HXR-NX5U

SERVICE NOTE (Check the following note before the service.)

1-1. POWER SUPPLY DURING REPAIRS
1-2. PRECAUTION ON REPLACING THE VC-582 BOARD
1-3. SELF-DIAGNOSIS FUNCTION
1-4. GPS RECEIVING CHECK(NX5E/NX5J/NX5N/NX5P/NX5U)
1-5. PRECAUTION ON REPLACING THE GY-022 BOARD

• Regarding the Adjustment, refer to SERVICE MANUAL 9-852-737-5□.

Revision History

Ver.	Date	History	Contents	S.M. Rev. issued
1.0	2010.01	Official Release	—	—
1.1	2010.01	Revised-1 (A1 09-396)	• Correction of SERVICE NOTE Page 1-2, 1-4 • Correction of EXPLODED VIEWS Page 2-3, 2-4, 2-6, 2-7, 2-10, 2-12, 2-13, 2-14 • Correction of SUPPLIED ACCESSORIES Page 2-18 • Correction of ELECTRICAL PARTS LIST Page 2-19, 2-20, 2-30 • Correction of BLOCK DIAGRAMS Page 4-2,4-5, 4-7, 4-8, 4-11 • Correction of FRAME SCHEMATIC DIAGRAMS Page 5-1, 5-2 • Correction of SCHEMATIC DIAGRAMS Page 6-32, 6-40, 6-44, 6-49 • Correction of PRINTED WIRING BOARDS Page 6-68, 6-69	Yes

Digital HD Video Camera Recorder

SONY

The components identified by mark ⚠ or dotted line with mark ⚠ are critical for safety. Replace only with part number specified.	Les composants identifiés par une marque ⚠ sont critiques pour la sécurité. Ne les remplacer que par une pièce portant le numéro spécifié.

HXR-NX5C/NX5E/NX5J/NX5M/NX5N/NX5P/NX5U
9-852-737-12

Sony EMCS Co.

2010A0800-1

© 2010.1
Published by Tokai TEC

These specifications are extracted from instruction manual of HXR-NX5E/NX5M/NX5P.

– ENGLISH –

Self Diagnosis Supported model

NXCAM PROGRESSIVE

AVCHD

InfoLITHIUM L

MEMORY STICK

HDMI

SPECIFICATIONS

System

Video signal
- PAL color, CCIR standards
- HDTV 1080/50i, 720/50p

Video recording system
- HD image quality: MPEG-4 AVC/ H.264 AVCHD
- SD image quality: MPEG-2 PS

Audio recording system
- Linear PCM 2ch (48 kHz 16-bit)
- Dolby Digital 2ch (48 kHz 16-bit)
- Dolby Digital Stereo Creator employed

Still image recording system
- DCF Ver. 2.0
- Exif Ver. 2.21
- MPF Baseline

Recording media (movies/still images)
- "Memory Stick PRO Duo" media Flash memory units
- SD memory cards, SDHC memory cards (Class 4, 6, 10)

Viewfinder
- Electric viewfinder (color, black and white)
- Picture: 1.1 cm (0.45 type, aspect ratio 16:9)
- Total dot number: 1 226 880 (approx. 852 × 3 [RGB] × 480)

Image device
- 6.0 mm (1/3 type) 3CMOS sensor
- Gross: Approx. 1 120 000 pixels
- Effective (movie, 16:9): Approx. 1 040 000 pixels*
- Effective (movie, 4:3): Approx. 780 000 pixels*

Lens
- G Lens
- 20 × (Optical), Approx. 30 × (Digital, when [D.EXTENDER] is set to [ON])
- Focal length f=4.1 - 82.0 mm (3/16 - 3 1/4 in.)
- When converted to a 35 mm still camera* 29.5 - 590 mm (1 3/16 - 23 1/4 in.) (16:9), 36.1 - 722 mm (1 7/16 - 28 1/2 in.) (4:3)
- F1.6 - 3.4
- Filter diameter: 72 mm (2 7/8 in.)

Color temperature
- [AUTO]
- (one push) A/B
- [INDOOR] (3 200K)
- [OUTDOOR] (5 800K±7 offset levels)
- [MANU WB TEMP] (2 300K - 15 000K in 100K steps)

Minimum illumination
- 1.5 lx (lux) (Fixed Shutter Speed 1/25, auto gain, auto iris) (F 1.6)

* When [SET] of [STEADYSHOT] is set to [STEADYSHOT] or [OFF]

Output connectors

VIDEO OUT jack
- Pin connector
- 1 Vp-p, 75 Ω (ohms) unbalanced, sync negative

AUDIO OUT jacks
- Pin connectors
- -10 dBu (at load impedance 47 kΩ (kilohms)), Output impedance with less than 2.2 kΩ (kilohms) (0 dBu = 0.775 Vrms)

COMPONENT OUT jack
- Mini-D jack
- Y: 1 Vp-p, 75 Ω (ohms)
- PB/PR, CB/CR: 0.7 Vp-p, 75 Ω (ohms)

HDMI OUT jack
- HDMI connector

SDI OUT jack
- BNC
- SMPTE292M/259M

(headphones) jack
- Stereo-minijack (Ø 3.5 mm)

Input connectors

INPUT1/INPUT2 jacks
- XLR 3-pin, female,
- MIC: -48 dBu: 3 kΩ (kilohms)
- (Variable in the range of between -60 dBu and -30 dBu in 6 dB step by the INPUT TRIM function)
- LINE: +4 dBu: 10 kΩ (kilohms)
- (0 dBu = 0.775 Vrms)

Input/Output connectors

USB jack
- mini-B

Remote jack
- Stereo mini-minijack (Ø 2.5 mm)

TC LINK IN/OUT jack
- Pin connector
- IN: 0.5 V to 18 Vp-p, 10 kΩ (kilohms)
- OUT: 1.2 Vp-p, 75 Ω (ohms)
- (IN/OUT switch-able)

LCD screen

Picture
- 8.0 cm (3.2 type, aspect ratio 16:9)

Total dot number
- 921 600 (1 920 × 480)

General

Power requirements
- DC 7.2 V (battery pack)
- DC 8.4 V (AC Adaptor/Charger)

Average power consumption*

HXR-NX5E/NX5P
- During camera recording using the microphone ECM-XM1 and viewfinder with normal brightness: 7.7 W
- During camera recording using the microphone ECM-XM1 and LCD with normal brightness: 7.7 W

HXR-NX5M
- During camera recording using the microphone ECM-XM1 and viewfinder with normal brightness: 7.4 W
- During camera recording using the microphone ECM-XM1 and LCD with normal brightness: 7.4 W

* When Flash Memory Unit HXR-FMU128 is used, the average power consumption increases about 1.1 W.

Operating temperature
- 0 °C to 40 °C (32 °F to 104 °F)

Storage temperature
- -20 °C to +60 °C (-4 °F to +140 °F)

Dimensions (approx.)
- 173 × 193 × 449 mm (6 7/8 × 7 5/8 × 17 3/4 in.) (w/h/d) including the projecting parts
- 173 × 193 × 449 mm (6 7/8 × 7 5/8 × 17 3/4 in.) (w/h/d) including the projecting parts with the battery pack (NP-F570)

Mass (approx.)
- 2.2 kg (4 lb 15 oz) including the lens hood with lens cover 2.5 kg (5 lb 7 oz) including the battery pack (NP-F570), lens hood with lens cover and microphone (ECM-XM1)

AC Adaptor/Charger AC-VL1

Power requirements
- AC 100 V - 240 V, 50 Hz/60 Hz

Power consumption
- 22 W

Output voltage
- DC 8.4 V*

Operating temperature
- 0 °C to 40 °C (32 °F to 104 °F)

Storage temperature
- -20 °C to +60 °C (-4 °F to +140 °F)

Dimensions (approx.)
- 136 × 51 × 90 mm (5 3/8 × 2 1/8 × 3 5/8 in.) (w/h/d) excluding the projecting parts

Mass (approx.)
- 270 g (9.6 oz) excluding the power cord (mains lead)

* See the label on the AC Adaptor/Charger for other specifications.

Rechargeable battery pack NP-F570

Maximum output voltage
- DC 8.4 V

Output voltage
- DC 7.2 V

Maximum charge voltage
- DC 8.4 V

Maximum charge current
- 3.0 A

Capacity
- Typical: 15.8 Wh (2 200 mAh)
- Minimum: 15.0 Wh (2 100 mAh)

Type
- Li-ion

Design and specifications are subject to change without notice.

- Manufactured under license from Dolby Laboratories.

These specifications are extracted from instruction manual of HXR-NX5N/NX5U.

– ENGLISH –

Self Diagnosis Supported model

NXCAM PROGRESSIVE

AVCHD

InfoLITHIUM L

MEMORY STICK

HDMI

SPECIFICATIONS

System

Video signal
- NTSC color, EIA standards
- HDTV 1080/60i, 720/60p

Video recording system
- HD image quality: MPEG-4 AVC/ H.264 AVCHD
- SD image quality: MPEG-2 PS

Audio recording system
- Linear PCM 2ch (48 kHz 16-bit)
- Dolby Digital 2ch (48 kHz 16-bit)
- Dolby Digital Stereo Creator employed

Still image recording system
- DCF Ver. 2.0
- Exif Ver. 2.21
- MPF Baseline

Recording media (movies/still images)
- "Memory Stick PRO Duo" media Flash memory unit SD memory card, SDHC memory card (Class 4, 6, 10)

Viewfinder
- Electric viewfinder (color, black and white)
- Picture: 1.1 cm (0.45 type, aspect ratio 16:9)
- Total dot number: 1 226 880 (approx. 852 × 3 [RGB] × 480)

Image device
- 6.0 mm (1/3 type) 3CMOS sensor
- Gross: Approx. 1 120 000 pixels
- Effective (movie, 16:9): Approx. 1 040 000 pixels*
- Effective (movie, 4:3): Approx. 780 000 pixels*

Lens
- G Lens
- 20 × (Optical), Approx. 30 × (Digital, when [D.EXTENDER] is set to [ON])
- Focal length f=4.1 - 82.0mm (3/16 - 3 1/4 in.)
- When converted to a 35 mm still camera* 29.5 - 590 mm (1 3/16 - 23 1/4 in.) (16:9), 36.1 - 722 mm (1 7/16 - 28 1/2 in.) (4:3)
- F1.6 - 3.4
- Filter diameter: 72 mm (2 7/8 in.)

Color temperature
- [AUTO]
- (one push) A/B
- [INDOOR] (3 200K)
- [OUTDOOR] (5 800K±7 offset levels)
- [MANU WB TEMP] (2 300K - 15 000K in 100K steps)

Minimum illumination
- 1.5 lx (lux) (Fixed Shutter Speed 1/30, auto gain, auto iris) (F 1.6)

* When [SET] of [STEADYSHOT] is set to [STEADYSHOT] or [OFF]

Output connectors

VIDEO OUT jack
- Pin connector
- 1 Vp-p, 75 Ω (ohms) unbalanced, sync negative

AUDIO OUT jacks
- Pin connectors
- -10 dBu (at load impedance 47 kΩ (kilohms)), Output impedance with less than 2.2 kΩ (kilohms)
- (0 dBu = 0.775 Vrms)

COMPONENT OUT jack
- Mini-D jack
- Y: 1 Vp-p, 75 Ω (ohms)
- PB/PR, CB/CR: 0.7 Vp-p, 75 Ω (ohms)

HDMI OUT jack
- HDMI connector

SDI OUT jack
- BNC
- SMPTE292M/259M

(headphones) jack
- Stereo-minijack (Ø 3.5 mm)

Input connectors

INPUT1/INPUT2 jacks
- XLR 3-pin, female,
- MIC: -48 dBu: 3 kΩ (kilohms)
- (Variable in the range of between -60 dBu and -30 dBu in 6 dB step by the INPUT TRIM function)
- LINE: +4 dBu: 10 kΩ (kilohms)
- (0 dBu = 0.775 Vrms)

Input/Output connectors

USB jack
- mini-B

Remote jack
- Stereo mini-minijack (Ø 2.5 mm)

TC LINK IN/OUT jack
- Pin connector
- IN: 0.5 V to 18 Vp-p, 10 kΩ (kilohms)
- OUT: 1.2 Vp-p, 75 Ω (ohms)
- (IN/OUT switch-able)

LCD screen

Picture
- 8.0 cm (3.2 type, aspect ratio 16:9)

Total dot number
- 921 600 (1 920 × 480)

General

Power requirements
- DC 7.2 V (battery pack)
- DC 8.4 V (AC Adaptor/Charger)

Average power consumption*
- During camera recording using the microphone ECM-XM1 and viewfinder with normal brightness: 7.9 W
- During camera recording using the microphone ECM-XM1 and LCD with normal brightness: 7.9 W

* When Flash Memory Unit HXR-FMU128 is used, the average power consumption increases about 1.1 W.

Operating temperature
- 0 °C to 40 °C (32 °F to 104 °F)

Storage temperature
- -20 °C to +60 °C (-4 °F to +140 °F)

Dimensions (approx.)
- 173 × 193 × 449 mm (6 7/8 × 7 5/8 × 17 3/4 in.) (w/h/d) including the projecting parts
- 173 × 193 × 449 mm (6 7/8 × 7 5/8 × 17 3/4 in.) (w/h/d) including the projecting parts with battery pack NP-F570
- 173 × 193 × 449 mm (6 7/8 × 7 5/8 × 17 3/4 in.) (w/h/d) including the projecting parts with battery pack NP-F770

Mass (approx.)
- 2.2 kg (4 lb 15 oz) including the lens hood with lens cover
- 2.5 kg (5 lb 7 oz) including battery pack NP-F570, lens hood with lens cover and microphone (ECM-XM1)
- 2.6 kg (5 lb 11 oz) including battery pack NP-F770, lens hood with lens cover and microphone (ECM-XM1)

AC Adaptor/Charger AC-VL1

Power requirements
- AC 100 V - 240 V, 50 Hz/60 Hz

Power consumption
- 22 W

Output voltage
- DC 8.4 V*

Operating temperature
- 0 °C to 40 °C (32 °F to 104 °F)

Storage temperature
- -20 °C to +60 °C (-4 °F to +140 °F)

Dimensions (approx.)
- 136 × 51 × 90 mm (5 3/8 × 2 1/8 × 3 5/8 in.) (w/h/d) excluding the projecting parts

Mass (approx.)
- 270 g (9.6 oz) excluding the power cord (mains lead)

* See the label on the AC Adaptor/Charger for other specifications.

Rechargeable battery pack NP-F770 (supplied with HXR-NX5U)

Maximum output voltage
- DC 8.4 V

Output voltage
- DC 7.2 V

Maximum charge voltage
- DC 8.4 V

Maximum charge current
- 3.0 A

Capacity
- Typical: 31.7 Wh (4 400 mAh)
- Minimum: 30.0 Wh (4 200 mAh)

Type
- Li-ion

Rechargeable battery pack NP-F570 (supplied with HXR-NX5N)

Maximum output voltage
- DC 8.4 V

Output voltage
- DC 7.2 V

Maximum charge voltage
- DC 8.4 V

Maximum charge current
- 3.0 A

Capacity
- Typical: 15.8 Wh (2 200 mAh)
- Minimum: 15.0 Wh (2 100 mAh)

Type
- Li-ion

Design and specifications are subject to change without notice.

- Manufactured under license from Dolby Laboratories.

自己診断搭載機種

概略仕様

システム
信号方式
NTSCカラー、EIA標準方式
HDTV 1080/60i、720/60p
ビデオ記録方式
HD画質：MPEG-4 AVC/H.264
AVCHD
SD画質：MPEG-2 PS
音声記録方式
リニアPCM 2ch(48kHz 16bit)
Dolby Digital 2ch(48kHz 16bit)
ドルビーデジタルステレオクリエーター搭載
静止画記録方式
DCF Ver.2.0準拠
Exif Ver.2.21準拠
MPF Baseline準拠
記録メディア(動画・静止画)
“メモリースティック PRO デュオ”
フラッシュメモリーユニットSDメモリーカード、SDHCメモリーカード(Class 4, 6, 10)
ファインダー
電子ファインダー：カラー、モノクロ
画面サイズ：1.1cm(0.45型、アスペクト比16：9)
総ドット数：1 226 880ドット
(852×3[RGB]×480相当)
撮像素子
6.0mm(1/3型)3CMOSセンサー
総画素数：約112万画素
動画時有効画素数(16：9モード)：約104万画素*
動画時有効画素数(4：3モード)：約78万画素*
ズームレンズ
Gレンズ
20倍(光学)、約30倍(デジタル、デジタルエクステンダー [ON]時)
f=4.1 ～ 82.0mm
35mmカメラ換算*
29.5 ～ 590mm(16:9モード)
(4:3モードでは36.1 ～ 722mm)
F1.6 ～ 3.4
フィルター径72mm
色温度切り換え
オート
ワンプッシュ（A, B)
屋内(3 200K)
屋外(5 800K±7段階)
色温度指定(2 300 ～ 15 000K、100K刻み)
最低被写体照度
1.5 lx(ルクス)(シャッタースピード固定(1/30)、オートゲインコントロール、アイリスオート)(F1.6)
* [STEADYSHOT]の[SET]が[STEADYSHOT]または[OFF]のとき

出力端子
VIDEO OUT端子
ピンジャック
1Vp-p、75Ω不平衡、同期負
AUDIO OUT端子
ピンジャック
-10dBu(47kΩ負荷時)、出力インピーダンス2.2kΩ以下
(0dBu=0.775Vrms)
COMPONENT OUT端子
ミニD端子
Y：1Vp-p、75Ω
PB/PR, CB/CR：0.7Vp-p、75Ω
HDMI OUT端子
HDMIコネクタ
SDI OUT端子
BNC型
SMPTE292M/259M規格準拠
(ヘッドホン)端子
ステレオミニジャック
(φ3.5mm)

入力端子
INPUT1/INPUT2端子
XLR型3ピン×2、凹
MIC：-48dBu：3kΩ
INPUT TRIM 機能により、-60dBu ～ -30dBuの範囲で可変(6dBステップ)
LINE：+4dBu：10kΩ
(0dBu=0.775Vrms)

入/出力端子
USB端子
mini-B
リモート端子
ステレオミニミニジャック(φ2.5mm)
TC LINK IN/OUT端子
ピンジャック
IN：0.5V ～ 18Vp-p、10kΩ
OUT：1.2Vp-p、75Ω
(IN/OUTはスイッチによる切り換え)

液晶画面
画面サイズ
8.0cm(3.2型、アスペクト比16:9)
総ドット数
921 600ドット
横1 920×縦480

電源部、その他
電源電圧
DC7.2V(バッテリーパック使用時)
DC8.4V(ACアダプター /チャージャー使用時)
消費電力
マイク(ECM-XM1)、ファインダー使用時、明るさ標準：7.9W
マイク(ECM-XM1)、液晶画面使用時、明るさ標準：7.9W
フラッシュメモリーユニット
HXR-FMU128使用時は、消費電力が約1.1W増えます。
動作温度
0℃～ 40℃
保存温度
−20℃～ +60℃
外形寸法
173×193×449mm
(突起部含む)(幅×高さ×奥行き)
本体質量
約2.2kg(レンズフード含む)
撮影時総質量
約2.6kg
(バッテリーパック(NP-F770)、レンズカバー付きフード、マイク(ECM-XM1)含む)

本機の仕様および外観は、改良のため予告なく変更することがありますが、ご了承ください。
・ドルビーラボラトリーズからの実施権に基づき製造されています。

Model information table

Model	HXR-NX5C	HXR-NX5E	HXR-NX5J	HXR-NX5N	HXR-NX5M	HXR-NX5P	HXR-NX5U
Destination	CH	AEP	J	E	AEP	E	US, CND
Color system	PAL	PAL	NTSC	NTSC	PAL	PAL	NTSC
GPS	×	○	○	○	×	○	○

- Abbreviation
  CH : Chinese model
  CND : Canadian model
  J : Japanese model

– ENGLISH –

Caution
Danger of explosion if battery is incorrectly replaced.
Replace only with the same or equivalent type.
Dispose of used batteries according to the instructions.

SAFETY-RELATED COMPONENT WARNING!!

COMPONENTS IDENTIFIED BY MARK ⚠ OR DOTTED LINE WITH MARK ⚠ ON THE SCHEMATIC DIAGRAMS AND IN THE PARTS LIST ARE CRITICAL TO SAFE OPERATION. REPLACE THESE COMPONENTS WITH SONY PARTS WHOSE PART NUMBERS APPEAR AS SHOWN IN THIS MANUAL OR IN SUPPLEMENTS PUBLISHED BY SONY.

ATTENTION AU COMPOSANT AYANT RAPPORT À LA SÉCURITÉ!

LES COMPOSANTS IDENTIFIÉS PAR UNE MARQUE ⚠ SUR LES DIAGRAMMES SCHÉMATIQUES ET LA LISTE DES PIÈCES SONT CRITIQUES POUR LA SÉCURITÉ DE FONCTIONNEMENT. NE REMPLACER CES COMPOSANTS QUE PAR DES PIÈCES SONY DONT LES NUMÉROS SONT DONNÉS DANS CE MANUEL OU DANS LES SUPPLÉMENTS PUBLIÉS PAR SONY.

SAFETY CHECK-OUT

After correcting the original service problem, perform the following safety checks before releasing the set to the customer.

1. Check the area of your repair for unsoldered or poorly-soldered connections. Check the entire board surface for solder splashes and bridges.
2. Check the interboard wiring to ensure that no wires are “pinched” or contact high-wattage resistors.
3. Look for unauthorized replacement parts, particularly transistors, that were installed during a previous repair. Point them out to the customer and recommend their replacement.
4. Look for parts which, through functioning, show obvious signs of deterioration. Point them out to the customer and recommend their replacement.
5. Check the B+ voltage to see it is at the values specified.
6. Flexible Circuit Board Repairing
   - Keep the temperature of the soldering iron around 270°C during repairing.
   - Do not touch the soldering iron on the same conductor of the circuit board (within 3 times).
   - Be careful not to apply force on the conductor when soldering or unsoldering.

Unleaded solder

Boards requiring use of unleaded solder are printed with the leadfree mark (LF) indicating the solder contains no lead.
(Caution: Some printed circuit boards may not come printed with the lead free mark due to their particular size.)

: LEAD FREE MARK

Unleaded solder has the following characteristics.

- Unleaded solder melts at a temperature about 40°C higher than ordinary solder.
  Ordinary soldering irons can be used but the iron tip has to be applied to the solder joint for a slightly longer time.
  Soldering irons using a temperature regulator should be set to about 350°C.
  Caution: The printed pattern (copper foil) may peel away if the heated tip is applied for too long, so be careful!
- Strong viscosity
  Unleaded solder is more viscous (sticky, less prone to flow) than ordinary solder so use caution not to let solder bridges occur such as on IC pins, etc.
- Usable with ordinary solder
  It is best to use only unleaded solder but unleaded solder may also be added to ordinary solder.

– JAPANESE –

注意
電池の交換は，正しく行わないと破裂する恐れがあります。
電池を交換する場合には必ず同じ型名の電池又は同等品と交換してください。
使用済み電池は，取扱指示に従って処分してください。

サービス，点検時には次のことにご注意ください。

1. 注意事項をお守りください。
   サービスのとき特に注意を要する個所については，キャビネット，シャーシ，部品などにラベルや捺印で注意事項を表示しています。これらの注意書き及び取扱説明書等の注意事項を必ずお守り下さい。
2. 指定部品のご使用を
   セットの部品は難燃性や耐電圧など安全上の特性を持ったものとなっています。従って交換部品は，使用されていたものと同じ特性の部品を使用して下さい。特に回路図，部品表に⚠印で指定されている安全上重要な部品は必ず指定のものをご使用下さい。
3. 部品の取付けや配線の引きまわしはもとどおりに
   安全上，チューブやテープなどの絶縁材料を使用したり，プリント基板から浮かして取付けた部品があります。また内部配線は引きまわしやクランパによって発熱部品や高圧部品に接近しないよう配慮されていますので，これらは必ずもとどおりにして下さい。
4. サービス後は安全点検を
   サービスのために取外したネジ，部品，配線がもとどおりになっているか，またサービスした個所の周辺を劣化させてしまったところがないかなどを点検し，安全性が確保されていることを確認して下さい。
5. チップ部品交換時の注意
   - 取外した部品は再使用しないで下さい。
   - タンタルコンデンサのマイナス側は熱に弱いため交換時は注意して下さい。
6. フレキシブルプリント基板の取扱いについて
   - コテ先温度を270℃前後にして行なって下さい。
   - 同一パターンに何度もコテ先を当てないで下さい。(3回以内)
   - パターンに力が加わらないよう注意して下さい。
7. 無鉛半田について
   無鉛半田を使用している基板には，無鉛(Lead Free)を意味するレッドフリーマークがプリントされています。
   (注意：基板サイズによっては，無鉛半田を使用していてもレッドフリーマークがプリントされていないものがあります)

：レッドフリーマーク

無鉛半田には，以下の特性があります。

- 融点が従来の半田よりも約40℃高い。
  従来の半田こてをそのまま使用することは可能ですが，少し長めにこてを当てる必要があります。温度調節機能のついた半田こてを使用する場合，約350℃に設定して下さい。
  注意：半田こてを長く当てすぎると，基板のパターン(銅箔)がはがれてしまうことがありますので，注意して下さい。
- 粘性が強い
  従来の半田よりも粘性が強いため，IC端子などが半田ブリッジしないように注意して下さい。
- 従来の半田と混ぜて使用可能
  無鉛半田には無鉛半田を追加するのが最適ですが，従来の半田を追加しても構いません。

1. SERVICE NOTE

1-1. POWER SUPPLY DURING REPAIRS

In this unit, about 10 seconds after power is supplied to the battery terminal using the regulated power supply (8.4V), the power is shut off so that the unit cannot operate.
These following method is available to prevent this.

Method:
Use the AC adaptor/charger (AC-VQ1050 etc.) and connecting cord (DK-415).

1-2. PRECAUTION ON REPLACING THE VC-582 BOARD

DESTINATION DATA

When you replace to the repairing board, the written destination data of repairing board also might be changed to original setting.
Start the Adjust Manual in the Adjust Station and execute the “Destination data write”.

USB SERIAL SAVE

When you replace to the repairing board, get the data from the former one.
Start the Adjust Manual in the Adjust Station and perform “USB SERIAL SAVE” to get the data.

USB SERIAL No.

The set is shipped with a unique ID (USB Serial No.) written in it.
This ID has not been written in a new board for service, and therefore it must be entered after the board replacement.
Start the Adjust Manual in the Adjust Station and execute the “USB serial No. input”.

1-3. SELF-DIAGNOSIS FUNCTION

1-3-1. Self-diagnosis Function

When problems occur while the unit is operating, the self-diagnosis function starts working, and displays on the Viewfinder or the LCD screen what to do. This function consists of two display; selfdiagnosis display and service mode display.
Details of the self-diagnosis functions are provided in the Instruction manual.

1-3-2. Self-diagnosis Display

When problems occur while the unit is operating, the counter of the Viewfinder or the LCD screen shows a 4-digit display consisting of an alphabet and numbers, which blinks at 3.2 Hz. This 5-character display indicates the “repaired by:”, “block” in which the problem occurred, and “detailed code” of the problem.

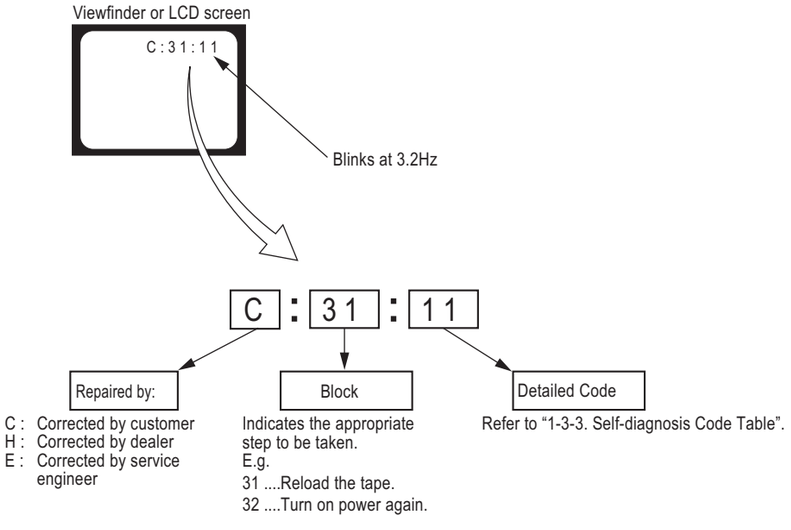
Viewfinder or LCD screen
C : 3 1 : 1 1
Blinks at 3.2Hz
C : 31 : 11
Repaired by:
Block
Detailed Code
C : Corrected by customer
H : Corrected by dealer
E : Corrected by service engineer
Indicates the appropriate step to be taken.
E.g.
31 ....Reload the tape.
32 ....Turn on power again.
Refer to “1-3-3. Self-diagnosis Code Table”.

1-3-3. Self-diagnosis Code Table

Self-diagnosis Code					Symptom/State	Correction
Repaired by:	Block Function		Detailed Code			
C	0	4	0	0	Non-standard battery is used.	Use the InfoLITHIUM battery.
C	0	6	0	0	The battery pack temperature is high.	Change the battery pack or place it in a cool place.
C	1	3	0	1	“memory card” is unformatted. “memory card” is broken.	Format the “memory card”. Insert a new “memory card”
C	1	3	0	4	The external storage media has connected loose.	Insert again the external storage media precisely.
					Abnormality occurs in the external storage media.	Format again the external storage media.
					The external storage media is broken.	Replace it with new one.
					Abnormality occurs in between the main and the external storage media.	Turn power off and turn power on again.
C	3	2	6	0	Difficult to adjust focus (Cannot initialize focus)	Retry turn the power on by the power switch. If it does not recover, check the focus MR sensor of lens block (pin ⑩, ⑫ of CN6602 on the VC-582 board). If it is OK, check the focus motor drive IC (IC6002 on the VC-582 board).
E	2	0	0	0	Flash memory data are rewritten.	Make flash memory data correct value. (Note 1)
E	6	1	1	0	Zoom operations fault (Cannot initialize zoom lens.)	Inspect the lens block zoom MR sensor (pin ㉜, ㉞ of CN6602 on the VC-582 board) when zooming is performed when the zoom lever is operated, or the zoom motor drive circuit (IC6002 on the VC-582 board) when zooming is not performed.
E	6	1	1	1	The abnormalities in initialization of the focus lens and the abnormalities in initialization of the zoom lens occurred simultaneously.	Check both C: 32: 60 and E: 61: 10 of the self-diagnosis code.
E	6	1	3	0	Reset position detect error when stepper iris is initialized.	Turn on the power and set to T (telephoto) end by rotating the ZOOM manual ring. While observing the iris blades in the lens, turn on the power again and check the iris blades in the lens work properly. Inspect the iris drive motor of lens drive block (Pin ⑯ to ⑲ of CN6602 on the VC-582 board), when the iris does not operate. Inspect the iris reset sensor of lens drive block (Pin ⑬ to ⑮ of CN6602 on the VC-582 board), when the iris operate.
E	6	2	0	0	Steadyshot function does not work well. (With pitch angular velocity sensor output stopped.)	Inspect pitch angular velocity sensor (SE8501 on the GY-022 board) peripheral circuits.
E	6	2	0	1	Steadyshot function does not work well. (With yaw angular velocity sensor output stopped.)	Inspect yaw angular velocity sensor (SE8502 on the GY-022 board) peripheral circuits.
E	6	2	0	2	Abnormality of IC for steadyshot.	Inspect the steadyshot circuit (IC6401 on the VC-582 board). If it does not recover, replace the VC-582 board. (Note 2) If an error occurs again, replace the lens block.
E	6	2	0	3	IC for steadyshot and micro controller communication abnormality among.	Inspect the steadyshot circuit (IC6401 on the VC-582 board).
E	6	2	1	0	Shift lens initializing failure	Inspect the EEPROM (IC5602, IC5603 on the VC-582 board). If it does not recover, replace the VC-582 board. (Note 2) If an error occurs again, replace the lens block.

Note 1: Start the Adjust Manual in the Adjust Station and refer to the “Destination data write”.
Note 2: When replacing the VC-582 board, remove the EEPROM (IC5602, IC5603) from the VC-582 board that is going to be repaired. Install the removed EEPROM (IC5602, IC5603) to the replaced VC-582 board.

Self-diagnosis Code				Symptom/State	Correction
Repaired by:	Block Function		Detailed Code		
E	6	2	1 1	Shift lens overheating (Pitch)	Inspect the IC6401 and peripheral circuits on the VC-582 board. If it does not recover, replace the VC-582 board. (Note) If an error occurs again, replace the lens block.
E	6	2	1 2	Shift lens overheating (Yaw)	Inspect the IC6401 and peripheral circuits on the VC-582 board. If it does not recover, replace the VC-582 board. (Note) If an error occurs again, replace the lens block.
E	6	2	2 0	Abnormality of lens thermister	Inspect the IC6401 and peripheral circuits on the VC-582 board. If it does not recover, replace the VC-582 board. (Note) If an error occurs again, replace the lens block.
E	9	2	0 1	Battery current value goes over the max discharge current	Check the remaining battery power because this symptom maybe depended on the remaining battery level, and confirm whether or not the symptom is occurred after replacing the battery. If the symptom is still occurred, overhaul inspection is needed. Connect the GC-012 board with VC-582 board through the FP-1161 (VC-GC) flexible board. Connect the GC-012 board with Control Switch Block (PS94000). Check each output of DC/DC converter (IC5201) on VC-582 board with connected the DC/Batt harness (the minimum connection to periphery) to VC-582 board.
E	9	4	0 0	Fault of writing or erasing the flash memory	Inspect the flash memory (IC2601 on the VC-582 board).
E	9	4	0 1	Internal flash memory fault	Inspect the flash memory (IC2601 on the VC-582 board).
E	9	4	0 2	BGM data error	Inspect the flash memory (IC2601 on the VC-582 board). If it is OK, check the CPU (IC2001 on the VC-582 board).
E	9	5	0 0	GPS hardware error	Check whether the flexible board of the GPS module is broken, and check whether it is inserted imperfectly. If there is no problem the flexible board, inspect or replacement of the GPS module.

Note: When replacing the VC-582 board, remove the EEPROM (IC5602, IC5603) from the VC-582 board that is going to be repaired. Install the removed EEPROM (IC5602, IC5603) to the replaced VC-582 board.

1-4. GPS RECEIVING CHECK(NX5E/NX5J/NX5N/NX5P/NX5U)

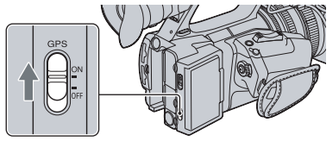

Set the GPS switch to ON.

appears, and your camcorder starts trying to triangulate. When your camcorder triangulates successfully, it will record the location information at the time movies were recorded.

Notes

- The indicator changes according to the strength of GPS signal reception.

Triangulating status	GPS indicators	GPS reception status
Function off	No indicator	The GPS switch is set to OFF, or the GPS receiver is not functioning normally.
Difficult		The camcorder cannot find a GPS signal, therefore, it cannot triangulate. Use the camcorder in an open area.
Searching		The camcorder is searching the GPS signal. It may take several minutes until the camcorder triangulates.
Triangulating		The camcorder is receiving a weak GPS signal.
Triangulating		The camcorder is receiving a GPS signal, and can acquire location information.
Triangulating		The camcorder is receiving a strong GPS signal, and can acquire location information.

- Even if a triangulating status indicator is displayed, the camcorder may not record the GPS information continuously, depending on the condition of GPS signal reception.

1-5. PRECAUTION ON REPLACING THE GY-022 BOARD

Angular Velocity Sensor

When you replace to the reparing board, write down the sensitivity displayed on the angular velocity sensor (SE8501, SE8502).
Start the Adjust Manual in the Adjust Station and execute the “GYRO sensor sensitivity adj”.

GY-022 BOARD (SIDE A)

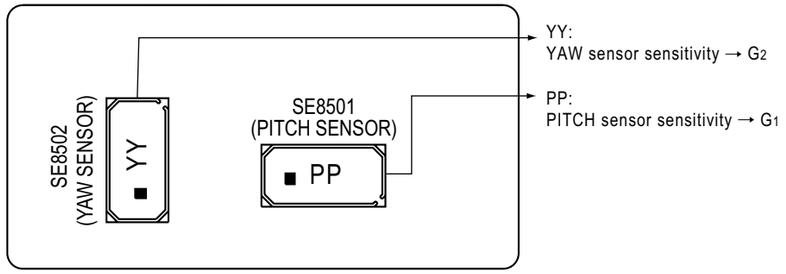

Note: The sensor sensitivity of SE8501, SE8502 of GY-022 board is written only repair parts.

1-1. 修理時の電源供給について

本機では，安定化電源(8.4Vdc)からバッテリ端子に電源を供給した場合，約10秒後にシャットオフし，動作しなくなります。これを避けるため，下記の方法を用いてください。

方法：
ACアダプタ/ チャージャ（AC-VQ1050など）と接続コード(DK-415)を使用する。

1-2. VC-582基板交換時の注意

仕向けデータ
補修用基板と交換する時，補修用基板に書かれている仕向けデータは元の設定と違っている場合があります。
Adjust StationからAdjust Manualを起動させて「Destination data write」を実行させてください。

USBシリアルセーブ
補修用基板と交換する時，交換前の基板よりUSBシリアルNo.を取得してください。
データの取得はAdjust StationからAdjust Manualを起動させて「USB SERIAL SAVE」を実行させてください。

USBシリアルNo.
セットは，1台毎に異なる固有のID(USB Serial No.)を書き込んだ後，出荷されています。
新品の補修用基板には，このIDが書き込まれていないので，基板交換後にIDを入力する必要があります。
Adjust StationからAdjust Manualを起動させて「USB serial No. input」を実行させてください。

1-3. 自己診断機能

1-3-1. 自己診断機能について

本機の動作に不具合が生じたとき，自己診断機能が働き，ビューファインダまたはＬＣＤ画面に，どう処置したらよいか判断できる表示を行います。「自己診断表示」と「サービスモード表示」の２つの表示があります。自己診断機能については取扱説明書にも掲載されています。

1-3-2. 自己診断表示

本機の動作に不具合が生じたとき，ビューファインダまたはLCD画面のカウンタ表示部分がアルファベットと数字の4桁表示になり，３．２Ｈｚで点滅します。この5 文字の表示によって対応者分類および不具合の生じたブロックの分類，不具合の詳細コードを示します。

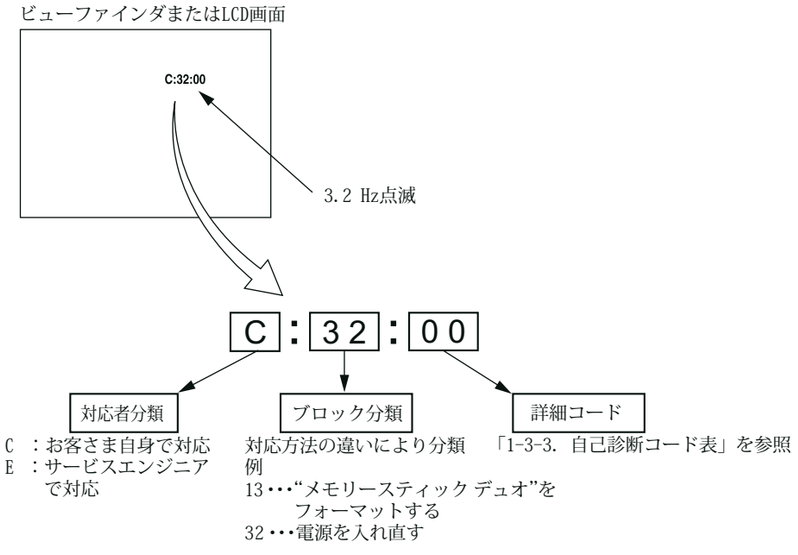

1-3-3. 自己診断コード表

自己診断コード					症状／状態	対応／方法
対応者	ブロック機能		詳細コード			
C	0	4	0	0	標準でないバッテリを使用している	インフォリチウムバッテリを使用する。
C	0	6	0	0	バッテリが高温になっている	バッテリを交換するか、バッテリを涼しいところに置く。
C	1	3	0	1	フォーマットしていない“メモリーカード”を入れた“メモリーカード”が壊れている	“メモリーカード”をフォーマットする。 新しい“メモリーカード”に交換する。
C	1	3	0	4	外部メディアの装着接触不良があった	外部メディアを装着しなおす。
					外部メディアに異常が発生した	外部メディアをフォーマットしなおす。
					外部メディアが壊れている	新しい外部メディアに交換する。
					外部メディアと本体との間でなんらかの異常があった	電源を入れ直す。
C	3	2	6	0	フォーカスが合いにくい （フォーカスの初期化ができない）	操作スイッチの電源を入れ直す。 復帰しない場合，レンズブロックのフォーカスMRセンサ(VC-582基板CN6602 ⑩，⑫ピン)を点検する。 異常なければフォーカスモータ駆動回路(VC-582基板IC6002)を点検する。
E	2	0	0	0	フラッシュメモリが書き換えられている	フラッシュメモリのデータを元の値に戻す。(注意1)
E	6	1	1	0	ズーム動作の異常 （ズームレンズの初期化ができない）	ズームレバーを操作したときにズーム動作をすれば，レンズブロックのズームMRセンサ(VC-582基板CN6602 ㉜，㉞ピン)を点検する。 ズーム動作をしなければズームモータ駆動回路(VC-582基板IC6002)を点検する。
E	6	1	1	1	フォーカスレンズ初期化異常，ズームレンズ初期化異常の同時発生	自己診断コードC：32：60とE：61：10の両方を点検する。
E	6	1	3	0	ステッパアイリス初期化時リセット位置検出エラー	電源投入後，ズームマニュアルリングを回してT(telephoto)端にする。レンズ内のアイリス羽に注目しながら電源を再投入し，レンズ内の羽が動作しているか確認する。アイリスが動作しない場合は，レンズドライブブロックのアイリスモータドライブ(VC-582基板CN6602 ⑯ ～ ⑲ピン)を点検。 アイリスが動作する場合は，レンズドライブブロックのアイリスリセットセンサ(VC-582基板CN6602 ⑬ ～ ⑮ピン)を点検。
E	6	2	0	0	手振れ補正が効きにくい （PITCH角速度センサ出力張り付き）	PITCH角速度センサ(GY-022基板SE8501)周辺回路を点検。
E	6	2	0	1	手振れ補正が効きにくい （YAW角速度センサ出力張り付き）	YAW角速度センサ(GY-022基板SE8502)周辺回路を点検。
E	6	2	0	2	手振れ補正用ICの異常	手振れ補正回路(VC-582基板IC6401)を点検。復帰しない場合，VC-582基板を交換する。(注意2)エラーが再度発生する場合は，レンズブロックを交換する。
E	6	2	0	3	手振れ補正用ICとマイクロコントローラとの通信異常	手振れ補正回路(VC-582基板IC6401)を点検。
E	6	2	1	0	シフトレンズ初期化異常	EEPROM(VC-582基板IC5602, IC5603)を点検。復帰しない場合，VC-582基板を交換する。(注意2)エラーが再度発生する場合は，レンズブロックを交換する。
E	6	2	1	1	シフトレンズオーバーヒート (PITCH)	VC-582基板のIC6401および周辺回路を点検。復帰しない場合，VC-582基板を交換する。(注意2)エラーが再度発生する場合は，レンズブロックを交換する。

注意1： Adjust StationからAdjust Manualを起動させて，「 Destination data write 」を参照してください。
注意2： VC-582基板を交換する場合は，修理するVC-582基板からEEPROM(IC5602, IC5603)を取り外してください。取り外したEEPROM (IC5602, IC5603)は取り替えたVC-582基板に取り付けてください。

自己診断コード			症状／状態	対応／方法
対応者	ブロック機能	詳細コード		
E	6 2	1 2	シフトレンズオーバーヒート (YAW)	VC-582基板のIC6401および周辺回路を点検。復帰しない場合，VC-582基板を交換する。(注意)エラーが再度発生する場レンズブロックを交換する。
E	6 2	2 0	レンズサーミスタの異常	VC-582基板のIC6401および周辺回路を点検。復帰しない場合は，VC-582基板を交換する。(注意)エラーが再度発生する場合は，レンズブロックを交換する。
E	9 2	0 1	(バッテリーの)電流値が最大放電電流を超えた	バッテリ残量に依存する場合があるので，バッテリ残量を確認する。 次にバッテリを交換して症状が出るか確認する。 バッテリを交換しても症状が出る場合は，エラー発生後に電源が切れてしまうため，分解して確認する。 VC-582基板にGC-012基板をFP-1161 (VC-GC) フレキシブル基板で接続する。 GC-012基板とコントロールスイッチブロック(PS94000)を接続する。 DC/バッテリハーネスをVC-582基板に接続した状態(最小限の接続) で DC ／ DCコンバータ (VC-582基板IC5201) の各チャンネル出力を確認する。
E	9 4	0 0	フラッシュメモリの書込み/消去動作不良	フラッシュメモリ(VC-582基板 IC2601)を点検する。
E	9 4	0 1	フラッシュメモリ内部異常	フラッシュメモリ(VC-582基板 IC2601)を点検する。
E	9 4	0 2	BGM データ異常	フラッシュメモリ(VC-582基板 IC2601)を点検する。 異常がない場合は，CPU(VC-582基板 IC2001)を点検する。
E	9 5	0 0	GPSハードウェア異常	GPS モジュールのフレキシブル基板が切れていないか，また完全に挿入されているかを点検する。フレキシブル基板に問題がない場合は，GPS モジュールの点検または交換をする。

注意： VC-582基板を交換する場合は，修理するVC-582基板からEEPROM(IC5602, IC5603)を取り外してください。取り外したEEPROM(IC5602, IC5603)は取り替えたVC-582基板に取り付けてください。

1-4. GPS 受信確認(NX5E/NX5J/NX5N/NX5P/NX5U)

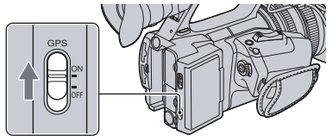

GPSスイッチを「ON」にする。

が表示され、測位準備が行われます。
測位できた場合、動画の撮影時に測位情報を記録します。

ご注意
・GPS衛星からの電波の受信状況によって画面に表示されるアイコンが変わります。

測位状況	画面表示	GPS受信状況
機能切	非表示	GPSスイッチが「OFF」になっている、またはエラーが起きている。
測位困難		GPS信号を受信できないため、測位情報が取れない。空の開けた場所に移動してください。
衛星検索中		衛星を検索中です。測位中になるまで数分かかることがあります。
測位中		弱いGPS信号を受信中。
測位中		GPS信号を受信中。測位情報を取得できる。
測位中		強いGPS信号を受信中。測位情報を取得できる。

・「測位中」になっていても、電波の受信状況によりGPS情報の記録が途切れることがあります。

1-5. GY-022基板交換時の注意

角速度センサ

補修用基板と交換する時，角速度センサ(SE8501，SE8502)の感度表示を書き留めてください。
Adjust StationからAdjust Manualを起動させて「GYRO sensor sensitivity adj.」を実行させてください。

GY-022 BOARD (SIDE A)

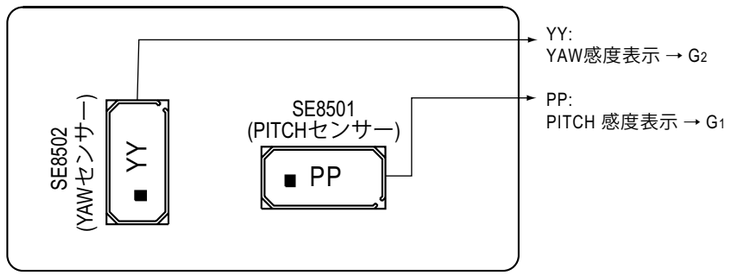

Note： GY-022基板のSE8501, SE8502感度表示は補修用基板にのみ記載されています。

2. REPAIR PARTS LIST

IDENTIFYING PARTS

Follow the disassembly in the numerical order given.

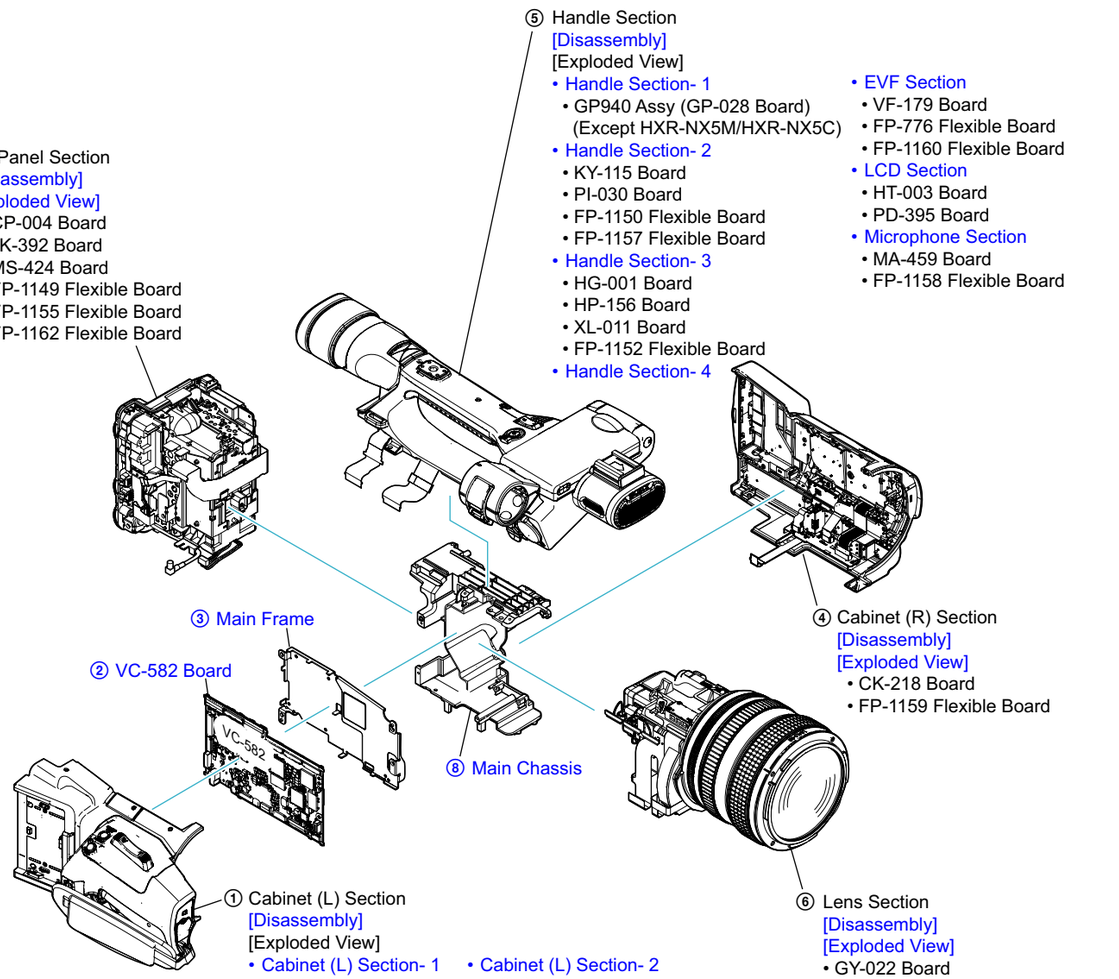

Link

ACCESSORIES ASSEMBLY

(ENGLISH)

NOTE:

- -XX, -X mean standardized parts, so they may have some differences from the original one.
- Items marked “*” are not stocked since they are seldom required for routine service. Some delay should be anticipated when ordering these items.
- The mechanical parts with no reference number in the exploded views are not supplied.
- Due to standardization, replacements in the parts list may be different from the parts specified in the diagrams or the components used on the set.
- CAPACITORS:
  uF: µF
- COILS
  uH: µH
- RESISTORS
  All resistors are in ohms.
  METAL: metal-film resistor
  METAL OXIDE: Metal Oxide-film resistor
  F: nonflammable
- SEMICONDUCTORS
  In each case, u: µ, for example:
  uA...: µA... , uPA... , µPA... ,
  uPB... , µPB... , µPC... , µPC... ,
  uPD..., µPD...

When indicating parts by reference number,please include the board name.

The components identified by mark ⚠ or dotted line with mark ⚠ are critical for safety.
Replace only with part number specified.

Les composants identifiés par une marque ⚠ sont critiques pour la sécurité.
Ne les remplacer que par une pièce portant le numéro spécifié.

(JAPANESE)

【使用上の注意】

- ここに記載されている部品は, 補修用部品であるため, 回路図及びセットに付いている部品と異なる場合があります。
- -XX, -Xは標準化部品のため, セットに付いている部品と異なる場合があります。
- *印の部品は常備在庫しておりません。
- コンデンサの単位でuFはμFを示します。
- 抵抗の単位Ωは省略してあります。

金　　被：金属被膜抵抗。
サンキン：酸化金属被膜抵抗。

- インダクタの単位でuHはμHを示します。
- 半導体の名称でuA..., uPA..., uPB..., uPC..., uPD...等はそれぞれμA..., μPA..., μPB..., μPC..., μPD...を示します。

お願い
図面番号で部品を指定するときは基板名又はブロックを併せて指定してください。

⚠印の部品，または⚠印付の点線で囲まれた部品は，安全性を維持するために，重要な部品です。
従って交換時は，必ず指定の部品を使用してください。

- Abbreviation
  CH : Chinese model
  CND : Canadian model
  J : Japanese model

View Position

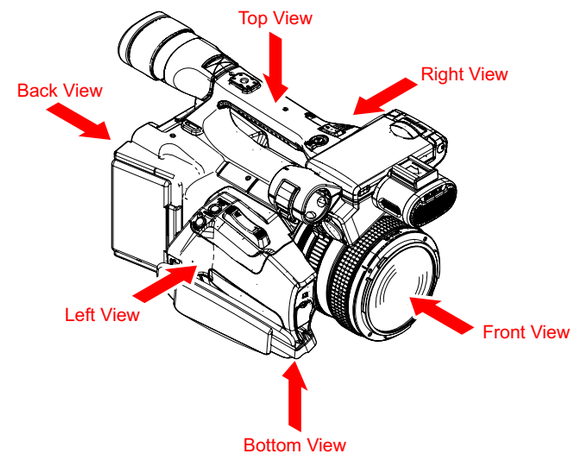

– ENGLISH –

NOTE FOR REPAIR

- Make sure that the flat cable and flexible board are not cracked of bent at the terminal.
  Do not insert the cable insufficiently nor crookedly.
- When remove a connector, don't pull at wire of connector. It is possible that a wire is snapped.
- When installing a connector, don't press down at wire of connector.
  It is possible that a wire is snapped.
- Do not apply excessive load to the gilded flexible board.

Cut and remove the part of gilt which comes off at the point.
(Be careful or some pieces of gilt may be left inside)

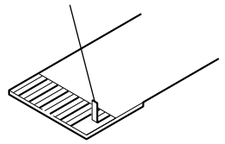

NOTE FOR DISCONNECTING THE HARNESS (COAXIAL CABLE)

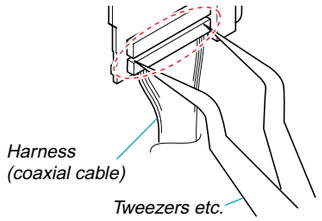

When disconnecting the harness (COAX IAL CABL E), do not pull the harness part but pull off the connector body with tweezers etc.

– JAPANESE –

修理時の注意

- フラットケーブルおよびフレキシブル基板の端子面に欠け，折れ等がないことを確認する。
  また，コネクタへの接続は，差し込み不足や斜め差しにならないように注意する。
- コネクタを取り外す時に，線材部（極細）を持って引っ張ると断線する恐れがありますので，絶対に線材部（極細）を持って引っ張らないでください。
- 線材部（極細）を押さえながらコネクタを差し込むと，線材部（極細）が断線する恐れがありますので，絶対に線材部（極細）には負担をかけないでください。
- 金メッキされているフレキシブル基板には，強い負担をかけないでください。

先端の剥がれたメッキ部はカットして除去してください。
（メッキ破片がコネクタ内に残っている場合もあるので注意してください）

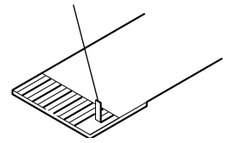

ハーネス（同軸ケーブル）の交換について

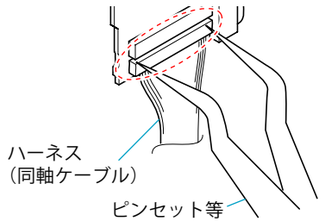

ハーネス（同軸ケーブル）を引き抜く際は、ハーネス部を引かず、ピンセット等でコネクタ部を引いてください。

Ver. 1.1 2010.01
The changed portions from
Ver. 1.0 are shown in blue.

2-1. EXPLODED VIEWS

2-1-1. OVERALL SECTION

ns: not supplied

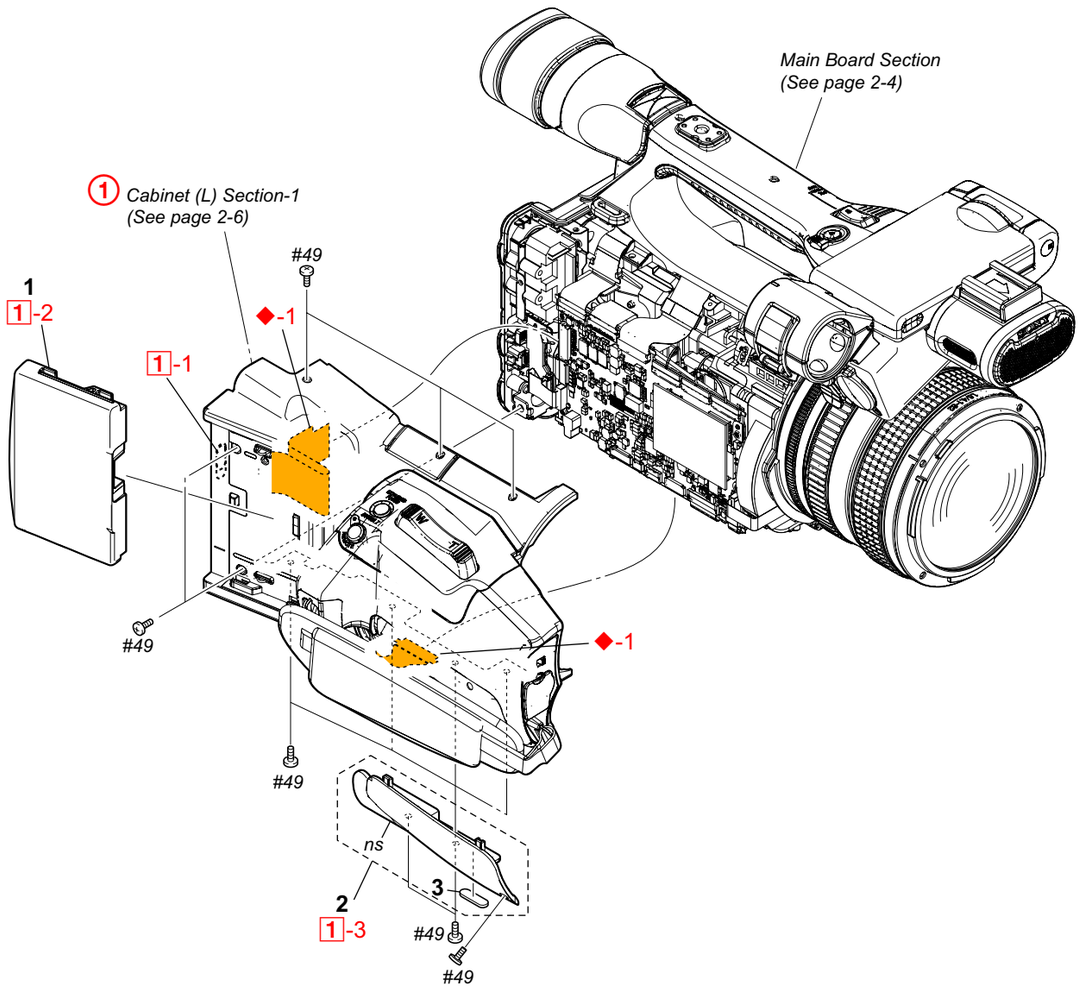

Ref. No.	Part No.	Description
1	4-165-238-01	COVER, EXT DUMMY
2	X-2515-789-1	COVER ASSY, GRIP
3	2-178-805-01	FOOT, RUBBER
#49	2-630-005-31	SCREW (M2), NEW TRUSTER, P2

DISASSEMBLY

1. Remove to numerical order ① (1-1 to 1-3) in the left figure.
2. The meaning of the sign in left figure is as follows. Be careful when it removes.
   ◆-X: Flexible Board, Flat Cable, Harness

① Release button (1-1) → EXT Dummy Cover (1-2) → #49 X 3 → Grip Cover Assy (1-3)

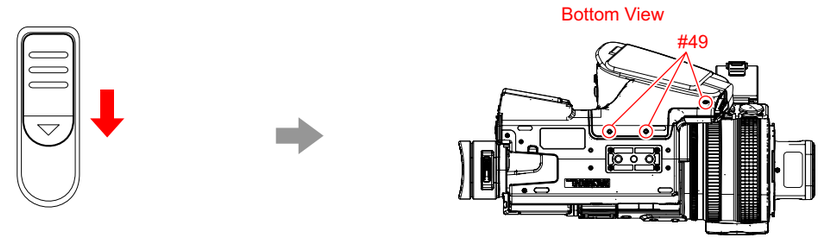

→ Flexible Board → #49 X 8

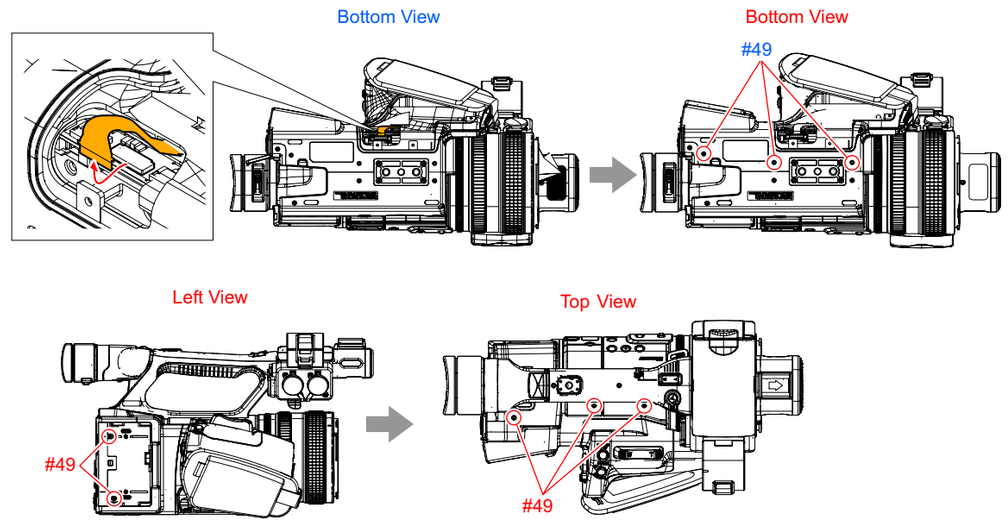

Screw

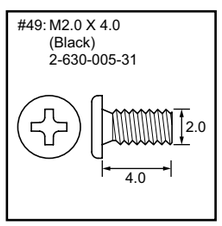

Ver. 1.1 2010.01
The changed portions from
Ver. 1.0 are shown in blue.

2-1-2. MAIN BOARD SECTION

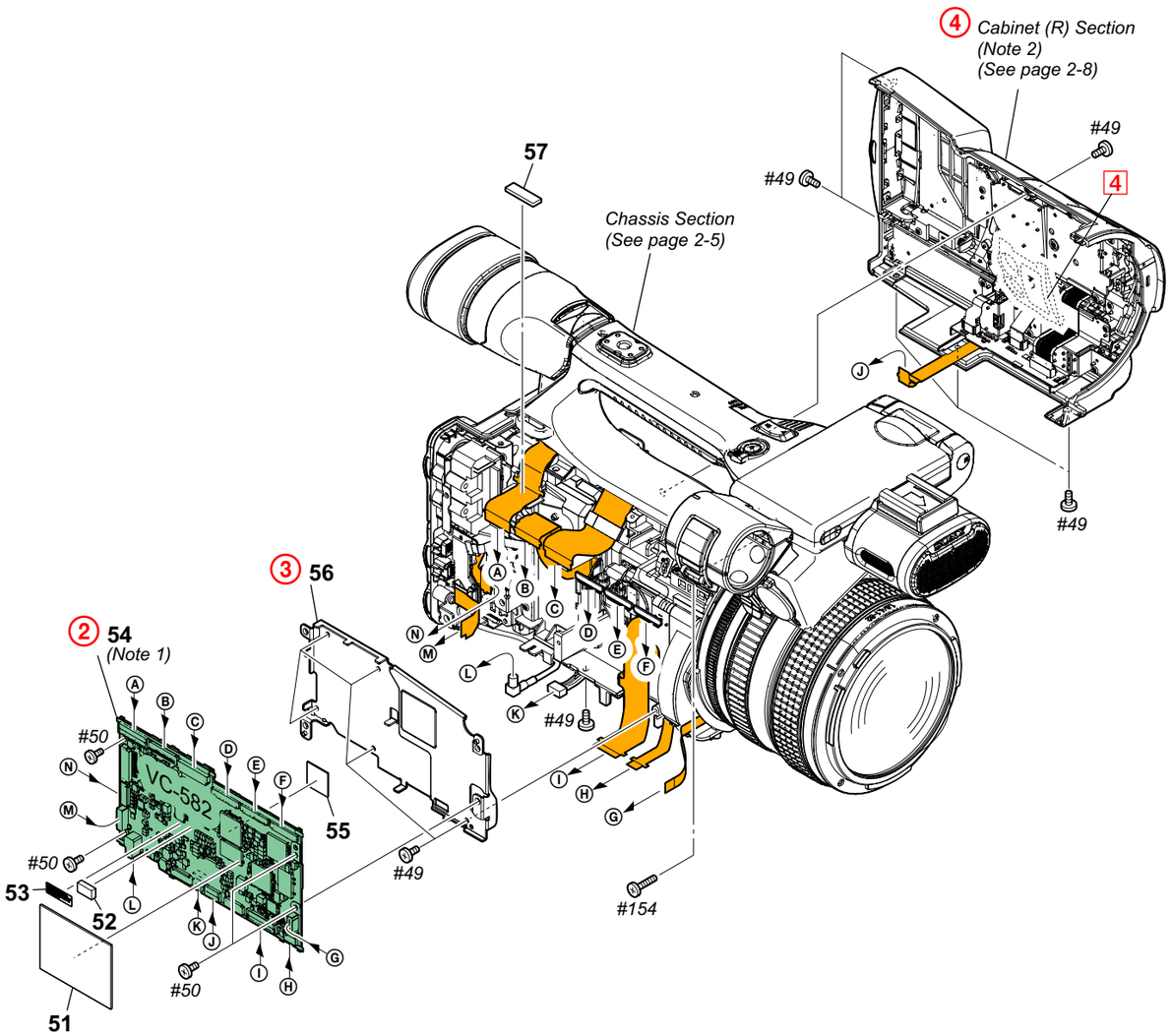

Ref. No.	Part No.	Description
* 51	4-165-223-01	SHEET (4535T1), RADIATION
* 52	4-170-751-01	SPACER (A), VC
* 53	4-165-995-01	LABEL, FUSE
54	A-1758-578-A	VC-582 BOARD, COMPLETE (SERVICE) (Note 1)
* 55	4-166-044-01	SPACER (B), VC

Ref. No.	Part No.	Description
* 56	4-165-252-01	FRAME, MAIN
* 57	4-175-181-01	SHEET (FP1152), WATERPROOF
#49	2-630-005-31	SCREW (M2), NEW TRUSTER, P2
#50	2-891-494-11	SCREW (M2), NEW TRUSTER, P2
#154	7-627-556-97	SCREW, PRECISION +P2.6X8 TYPE 1

DISASSEMBLY

1. Remove to numerical order (② to ④) in the left figure.
2. The meaning of the sign in left figure is as follows. Be careful when it removes.
   ◆-X: Flexible Board, Flat Cable, Harness

② #50 X 4

Left View

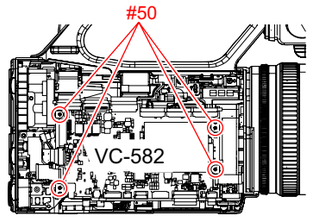

③ #49 X 6

Left View

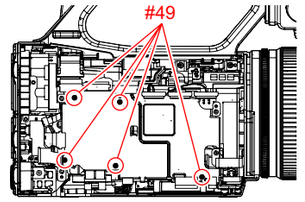

Bottom View

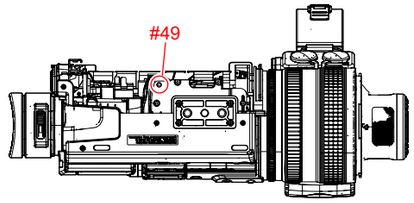

④ Open Lid AL (4) → #49 X 6 → #154 X 1

Right View

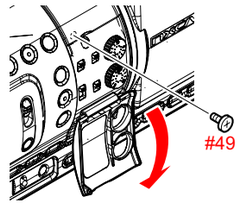

Bottom View

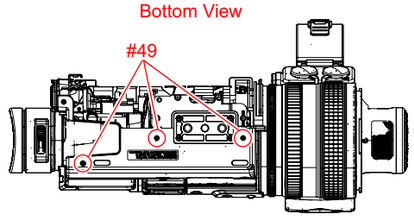

Back View

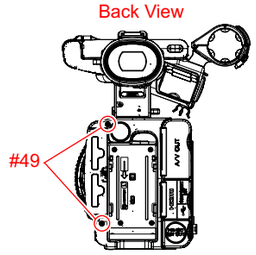

Left View

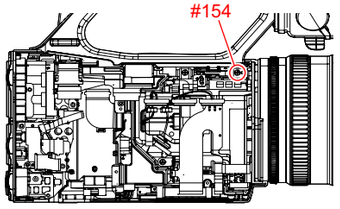

Screw

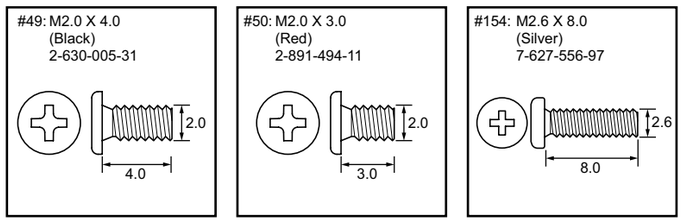

Note

Note 1: Refer to “Assembly-8: How to arrange Harness (Coaxial Cable)” when installing.

Note 2: Refer to “Assembly-7: On installation of the Cabinet (R) section, adjust the position of the ND filter switch” when installing.

Note 1: 組立時は“Assembly-8: How to arrange Harness (Coaxial Cable)”を参照してください。

Note 2: 組立時は“Assembly-7: On installation of the Cabinet (R) section, adjust the position of the ND filter switch”を参照してください。

2-1-3. CHASSIS SECTION

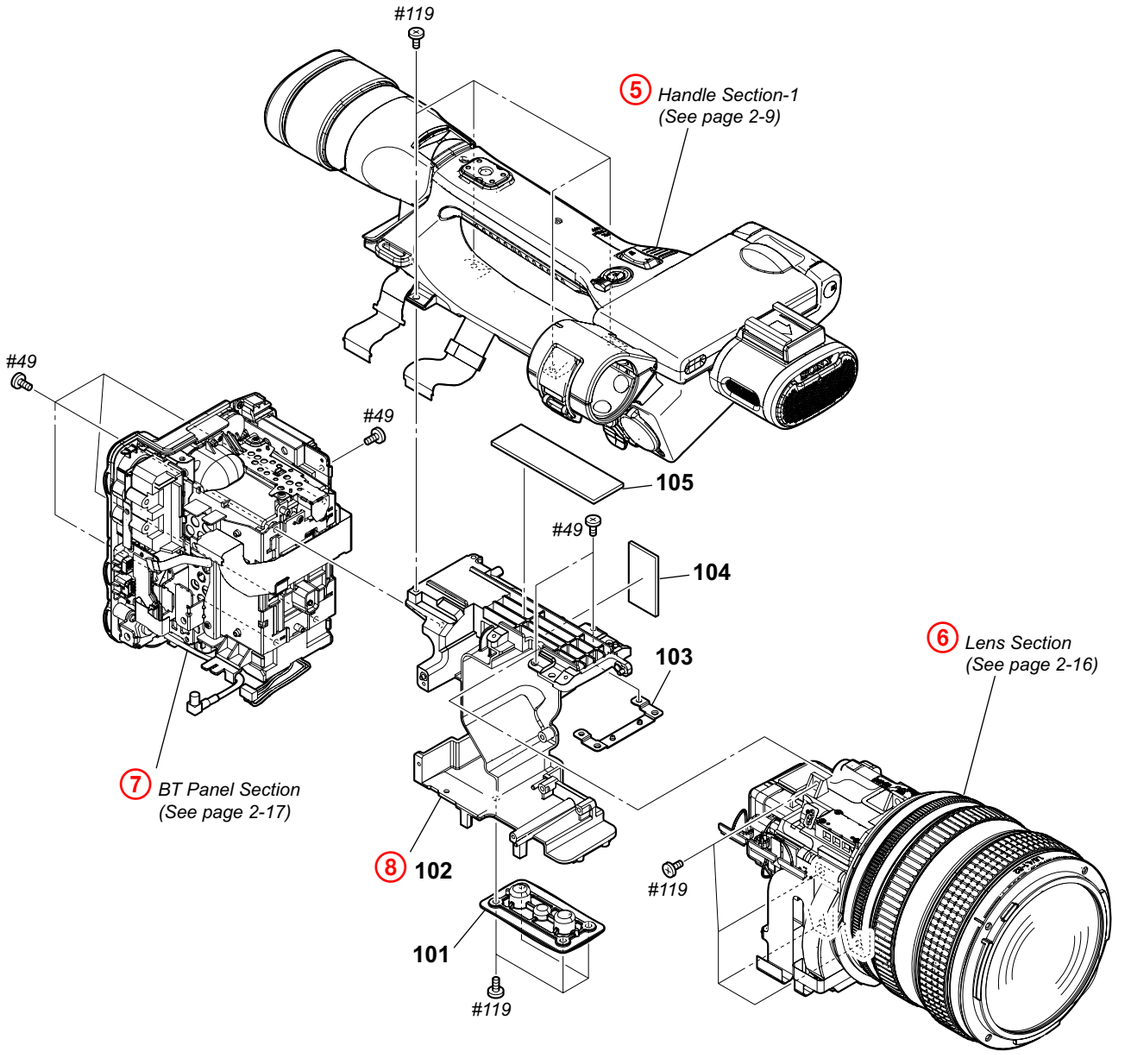

Ref. No.	Part No.	Description
101	4-119-234-11	WASHER, TRIPOD
* 102	4-165-251-01	CHASSIS, MAIN
103	4-119-237-01	PLATE (F), MC FIXED
* 104	4-165-225-01	SHEET (3218T1), RADIATION
105	4-165-224-01	SHEET (6018T1), RADIATION

Ref. No.	Part No.	Description
#49	2-630-005-31	SCREW (M2), NEW TRUSTER, P2
#119	7-627-556-58	SCREW +P 2.6X5

DISASSEMBLY

1. Remove to numerical order (⑤ to ⑧) in the left figure.
2. The meaning of the sign in left figure is as follows. Be careful when it removes.

⑤ #119 X 4

Top View

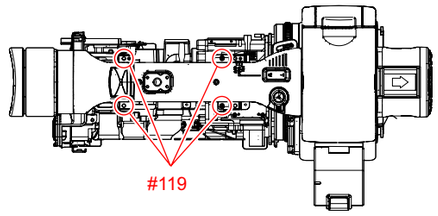

⑥ #119 X 4

Left View

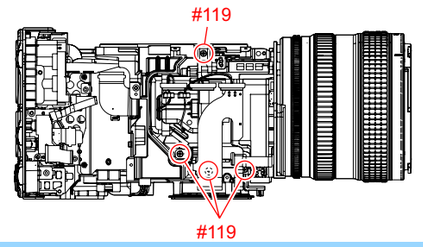

⑦ #49 X 5

Back View

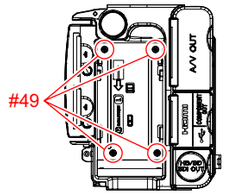

Right View

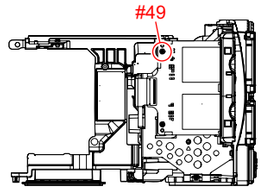

Screw

#49: M2.0 X 4.0
(Black)
2-630-005-31

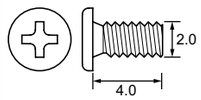

#119: M2.6 X 5.0
(Black)
7-627-556-58

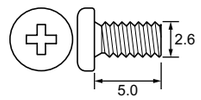

Ver. 1.1 2010.01
The changed portions from
Ver. 1.0 are shown in blue.

2-1-4. CABINET (L) SECTION-1

ns: not supplied

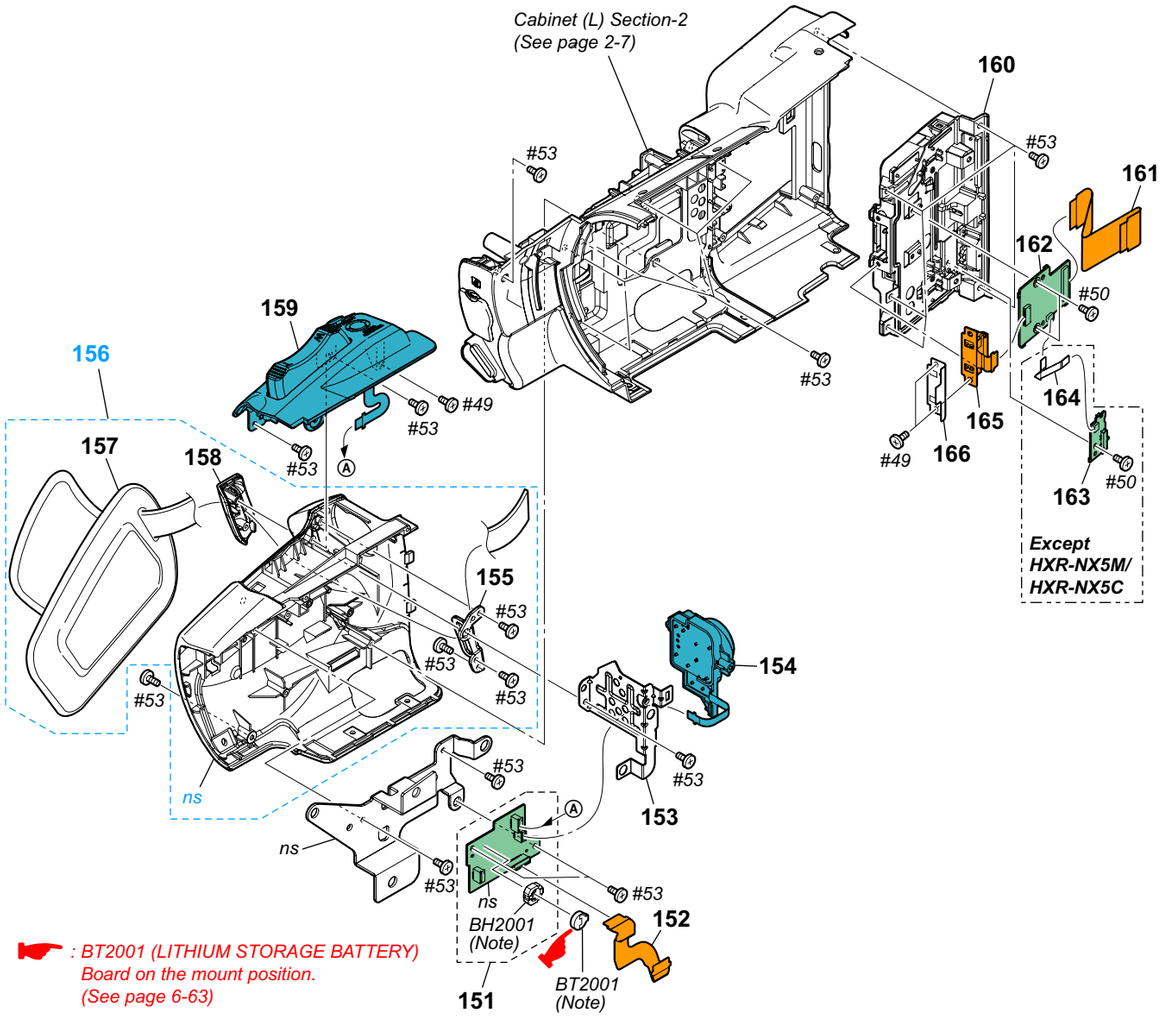

Screw

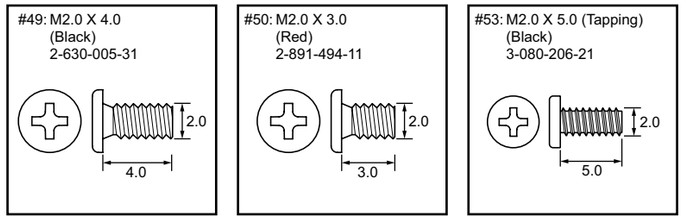

Note

Caution :
Danger of explosion if battery is incorrectly replaced.
Replace only with the same or equivalent type.
Dispose of used batteries according to the instructions.

Note 1: Replace the battery holder (BH2001) together when replacing the lithium storage battery (BT2001) on the GC-012 board. (The battery holder removed once cannot be used again.)
When mounting these parts, mount new battery holder first and attach new lithium storage battery next.

Note 2: Refer to "Assembly-5: On installation of the GS-010 Board, adjust the position of the switch" when installing.

注意 :
電池の交換は，正しく行わないと破裂する恐れがあります。
電池を交換する場合には必ず同じ型名の電池又は同等品と交換してください。
使用済み電池は，取扱指示に従って処分してください。

Note 1:
GC-012基板のリチウム蓄電池（BT2001）を交換する場合はバッテリホルダ（BH2001）も同時に新品に交換して下さい。
（一度使用したバッテリホルダは再使用できません。）
部品取り付けの際は，先にバッテリホルダを取り付けてからリチウム蓄電池を装着して下さい。

Note 2: 組立時は"Assembly-5: On installation of the GS-010 Board, adjust the position of the switch."を参照してください。

Ref. No.	Part No.	Description
151	A-1752-113-A	GC-012 BOARD, COMPLETE
152	1-879-860-11	FP-1161 FLEXIBLE BOARD
* 153	4-165-326-01	FRAME, PS
154	1-487-447-11	SWITCH BLOCK, CONTROL (PS94000)
* 155	4-165-331-01	BRACKET (REAR), GRIP BELT
156	X-2515-778-1	CABINET (G (94000)) ASSY
157	2-178-804-01	BELT, GRIP
* 158	4-165-330-01	HOLDER, GRIP BELT
159	1-487-448-11	SWITCH BLOCK, CONTROL (PZ94000)
160	X-2515-779-1	CABINET (S (94000)) ASSY (EXCEPT HXR-NX5M/HXR-NX5C)
160	X-2515-788-1	CABINET (S (94003)) ASSY (HXR-NX5M/HXR-NX5C)

Ref. No.	Part No.	Description
161	1-879-855-11	FP-1156 FLEXIBLE BOARD
162	A-1752-127-A	AS-063 BOARD, COMPLETE
163	A-1752-124-A	GS-010 BOARD, COMPLETE (EXCEPT HXR-NX5M/HXR-NX5C) (Note 2)
164	1-837-242-11	CABLE, FLEXIBLE FLAT (FFC-202) (EXCEPT HXR-NX5M/HXR-NX5C)
165	A-1752-135-A	FP-1151 FLEXIBLE BOARD, COMPLETE
* 166	4-165-336-01	RETAINER, EXT CONNECTOR (M)
⚠BT2001	1-756-134-12	BATTERY, STORAGE, LITHIUM (Note 1)
⚠BH2001	1-756-615-61	HOLDER, BATTERY (Note 1)
#49	2-630-005-31	SCREW (M2), NEW TRUSTER, P2
#50	2-891-494-11	SCREW (M2), NEW TRUSTER, P2
#53	3-080-206-21	SCREW, TAPPING, P2

Ver. 1.1 2010.01
The changed portions from
Ver. 1.0 are shown in blue.

2-1-5. CABINET (L) SECTION-2

ns: not supplied

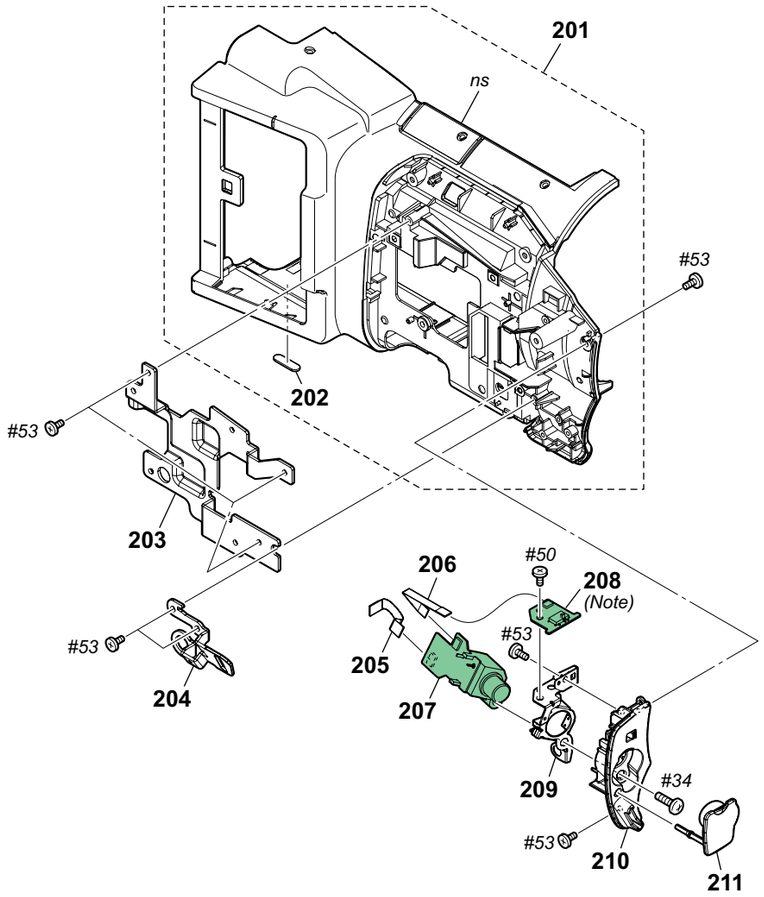

Ref. No.	Part No.	Description
201	X-2515-776-1	CABINET (L (94000)) ASSY (EXCEPT HXR-NX5M/HXR-NX5C)
201	X-2515-787-1	CABINET (L (94003)) ASSY (HXR-NX5M/HXR-NX5C)
202	2-178-805-01	FOOT, RUBBER
* 203	4-165-334-01	HEAT SINK, L
* 204	4-165-327-01	BRACKET (FRONT), GRIP BELT
205	1-837-240-11	CABLE, FLEXIBLE FLAT (FFC-194)
206	1-837-242-11	CABLE, FLEXIBLE FLAT (FFC-202)
207	A-1752-121-A	TC-001 BOARD, COMPLETE
208	A-1752-126-A	TS-157 BOARD, COMPLETE (Note)
209	4-165-237-01	FRAME, TC
210	X-2515-777-1	CABINET (TC) ASSY
211	4-165-240-01	COVER, TC
#34	3-077-331-41	+BV3 (3-CR)
#50	2-891-494-11	SCREW (M2), NEW TRUSTER, P2
#53	3-080-206-21	SCREW, TAPPING, P2

Screw

#34: M3.0 X 8.0
(Black)
3-077-331-41

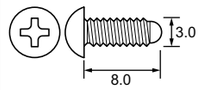

#50: M2.0 X 3.0
(Red)
2-891-494-11

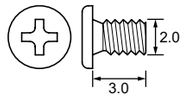

#53: M2.0 X 5.0 (Tapping)
(Black)
3-080-206-21

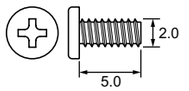

Note

Note : Refer to “Assembly-6: On installation of the TS-157 Board, adjust the position of the switch” when installing.

Note : 組立時は“Assembly-6: On installation of the TS-157 Board, adjust the position of the switch.”を参照してください。

2-1-6. CABINET (R) SECTION

ns: not supplied

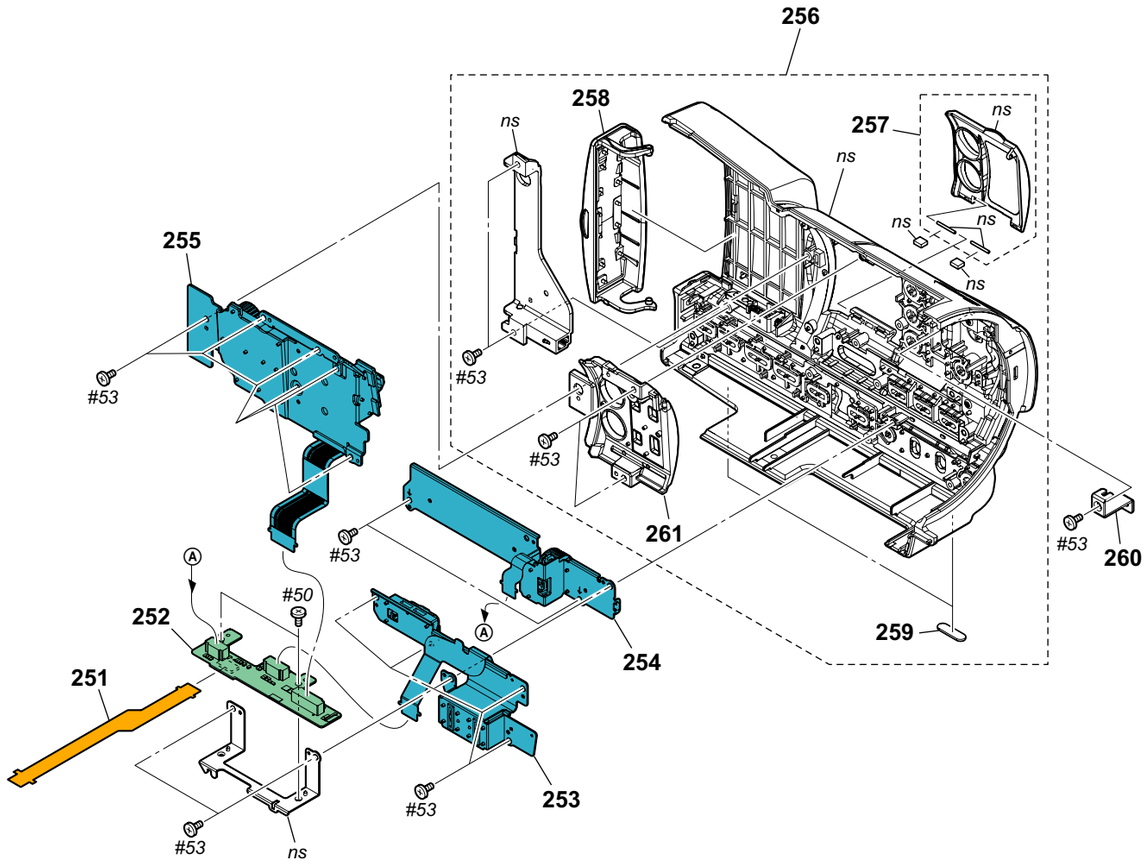

Ref. No.	Part No.	Description
251	1-879-858-11	FP-1159 FLEXIBLE BOARD
252	A-1752-112-A	CK-218 BOARD, COMPLETE
253	1-487-451-11	SWITCH BLOCK, CONTROL (CF94000)
254	1-487-449-11	SWITCH BLOCK, CONTROL (KP94000)
255	1-487-450-11	SWITCH BLOCK, CONTROL (AU94000)

Ref. No.	Part No.	Description
256	X-2515-775-1	CABINET (R (94000)) ASSY (EXCEPT HXR-NX5M/HXR-NX5C)
256	X-2515-786-1	CABINET (R (94003)) ASSY (HXR-NX5M/HXR-NX5C)
257	X-2546-696-1	LID SUB ASSY (94000), AL (SERVICE)
258	X-2546-465-1	LID SUB ASSY (94000), MS (SERVICE)
* 259	4-165-325-01	SHEET, RUBBER
* 260	4-119-383-01	PLATE, CABINET (R) FIXED
* 261	4-165-313-01	BASE, AL
#50	2-891-494-11	SCREW (M2), NEW TRUSTER, P2
#53	3-080-206-21	SCREW, TAPPING, P2

Screw

#50: M2.0 X 3.0
(Red)
2-891-494-11

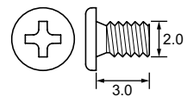

#53: M2.0 X 5.0 (Tapping)
(Black)
3-080-206-21

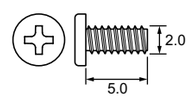

2-1-7. HANDLE SECTION-1

ns: not supplied

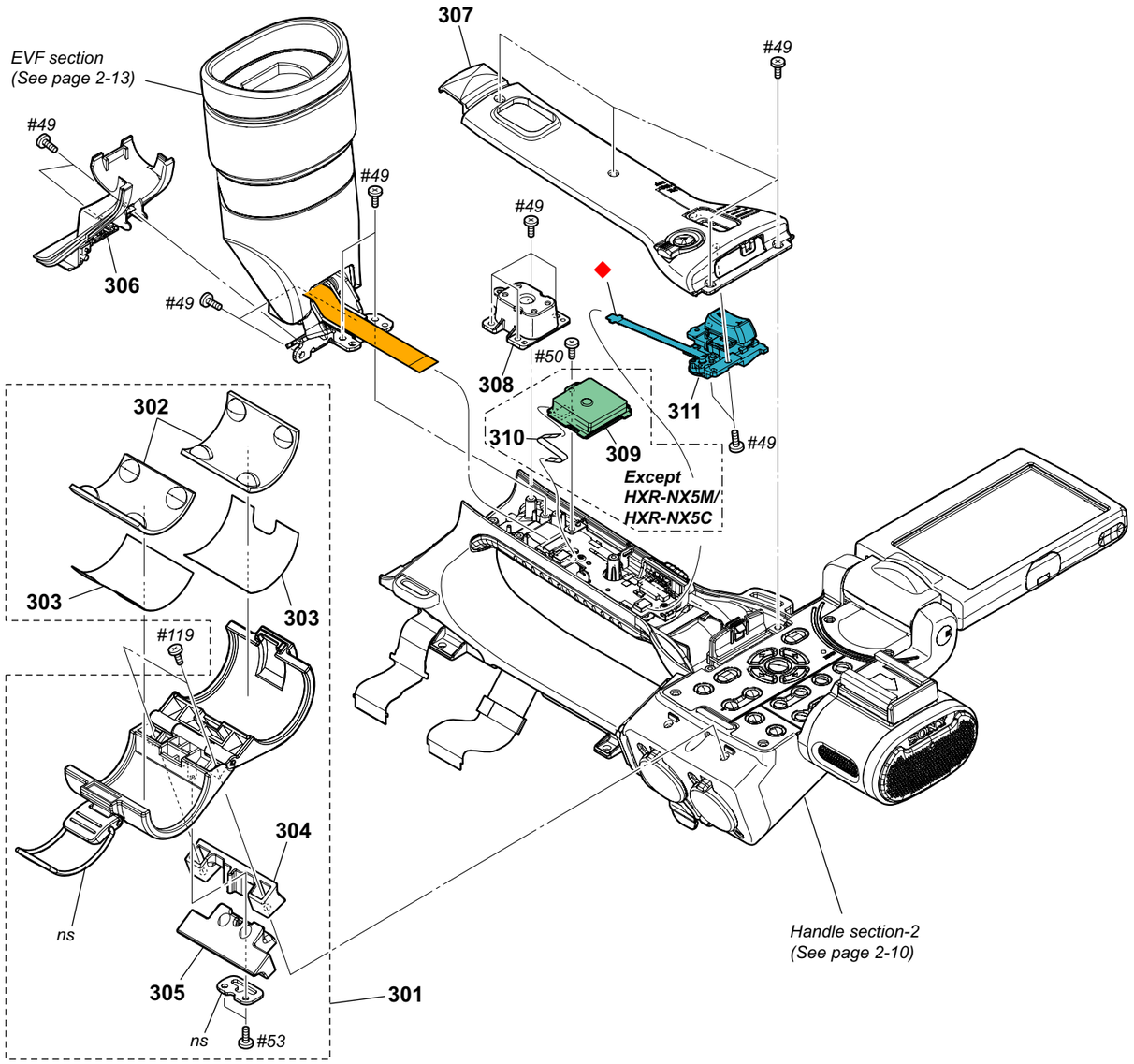

Ref. No.	Part No.	Description
301	X-2342-570-1	HOLDER (93000) ASSY, MICROPHONE
302	3-284-080-01	RUBBER, MICROPHONE
303	3-284-081-01	SHEET, RUBBER ADHESIVE
304	3-284-075-02	COVER, MICROPHONE HOLDER RUBBER
305	4-119-861-01	RUBBER (93000), HOLDER
306	X-2515-770-1	COVER (94000) ASSY, (REAR)
307	X-2515-769-1	CABINET (94000) ASSY, (UPPER)
308	3-288-538-01	SHOE, REAR (COLD)
309	A-1753-082-A	GP940 ASSY (EXCEPT HXR-NX5M/HXR-NX5C)
310	1-837-242-11	CABLE, FLEXIBLE FLAT (FFC-202) (EXCEPT HXR-NX5M/HXR-NX5C)

Ref. No.	Part No.	Description
311	1-480-298-11	SWITCH BLOCK, CONTROL (GZ92000)
#49	2-630-005-31	SCREW (M2), NEW TRUSTER, P2
#50	2-891-494-11	SCREW (M2), NEW TRUSTER, P2
#53	3-080-206-21	SCREW, TAPPING, P2
#119	7-627-556-58	SCREW +P 2.6X5

DISASSEMBLY

1. The meaning of the sign in left figure is as follows. Be careful when it removes.
   ◆-X: Flexible Board, Flat Cable, Harness

Screw

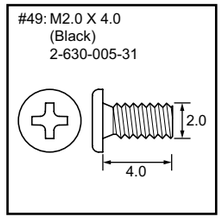

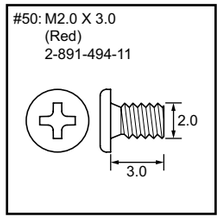

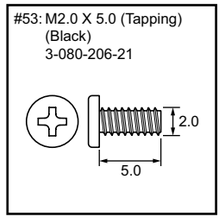

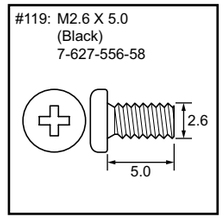

Ver. 1.1 2010.01
The changed portions from
Ver. 1.0 are shown in blue.

2-1-8. HANDLE SECTION-2

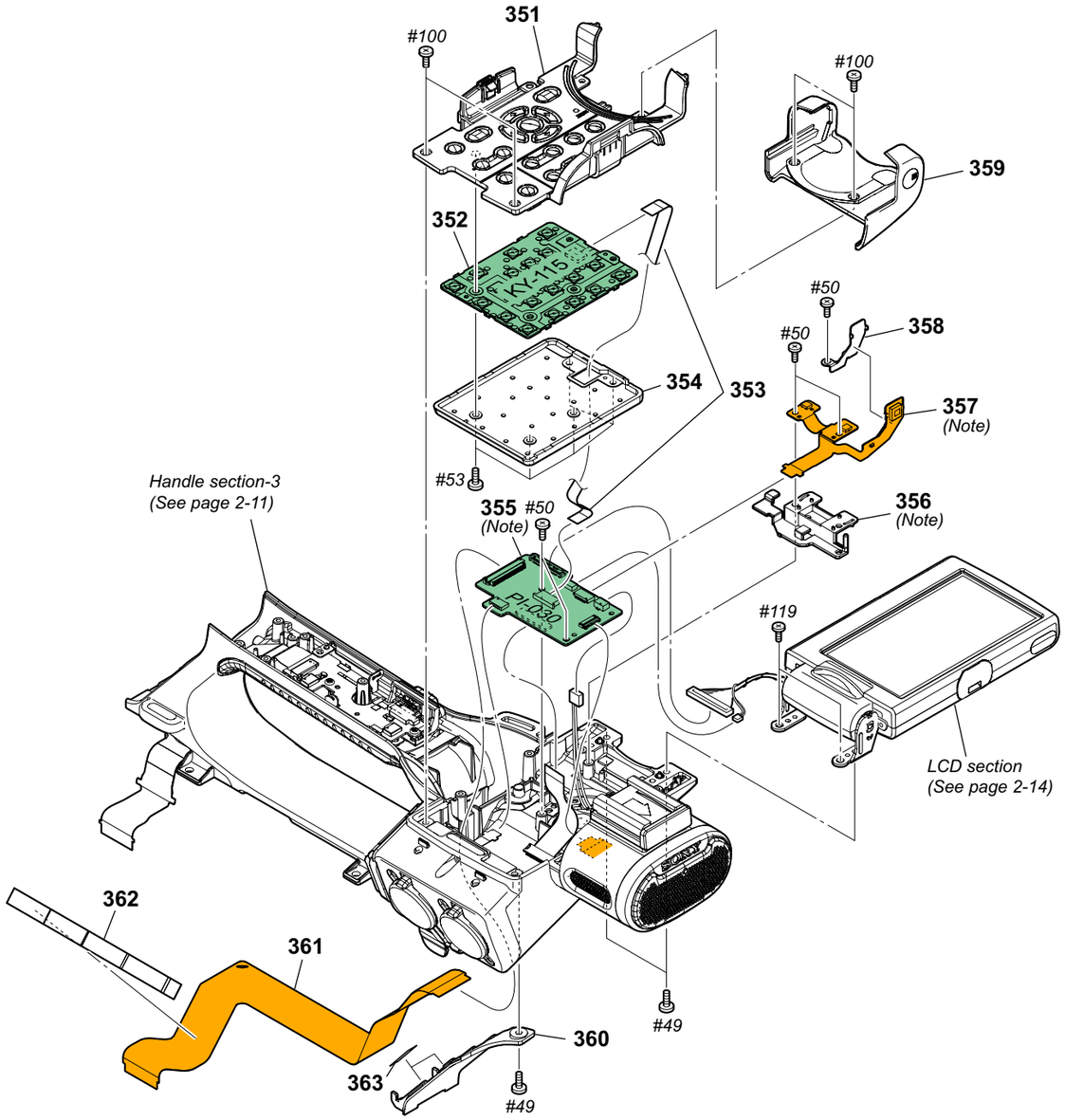

Ref. No.	Part No.	Description
351	X-2515-767-1	PANEL (94000) ASSY, CONTROL
352	A-1752-116-A	KY-115 BOARD, COMPLETE
353	1-837-240-11	CABLE, FLEXIBLE FLAT (FFC-194)
* 354	4-165-283-01	COVER (BB)
355	A-1752-129-A	PI-030 BOARD, COMPLETE (Note)
356	4-119-279-01	HOLDER, FLEXIBLE (Note)
357	A-1752-134-A	FP-1150 FLEXIBLE BOARD, COMPLETE (Note)
358	X-2188-609-1	FIXED (759) ASSY
359	X-2515-768-1	COVER (94000) ASSY, (FRONT)
360	4-165-281-01	CABINET, HANDLE (FRONT)

Ref. No.	Part No.	Description
361	1-879-856-12	FP-1157 FLEXIBLE BOARD
362	4-169-934-01	SHEET (FP1157), COUNTERMEASURE
* 363	4-174-174-01	CUSHION, HANDLE (FRONT) CABINET
#49	2-630-005-31	SCREW (M2), NEW TRUSTER, P2
#50	2-891-494-11	SCREW (M2), NEW TRUSTER, P2
#53	3-080-206-21	SCREW, TAPPING, P2
#100	3-080-203-51	SREW (M2), LOCK ACE, P2
#119	7-627-556-58	SCREW +P 2.6X5

Screw

#49: M2.0 X 4.0
(Black)
2-630-005-31

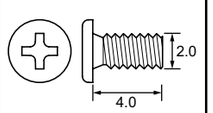

#50: M2.0 X 3.0
(Red)
2-891-494-11

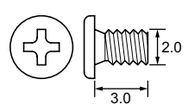

#53: M2.0 X 5.0 (Tapping)
(Black)
3-080-206-21

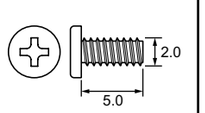

#100: M2.0 X 6.0
(Black)
3-080-203-51

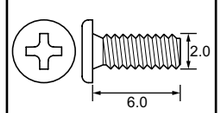

#119: M2.6 X 5.0
(Black)
7-627-556-58

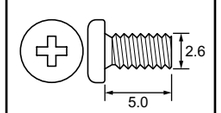

Note

Note : Refer to “Assembly-4: How to arrange Harnesses and Flexible Board” when installing.

Note : 組立時は“Assembly-4: How to arrange Harnesses and Flexible Board”を参照してください。

2-1-9. HANDLE SECTION-3

ns: not supplied

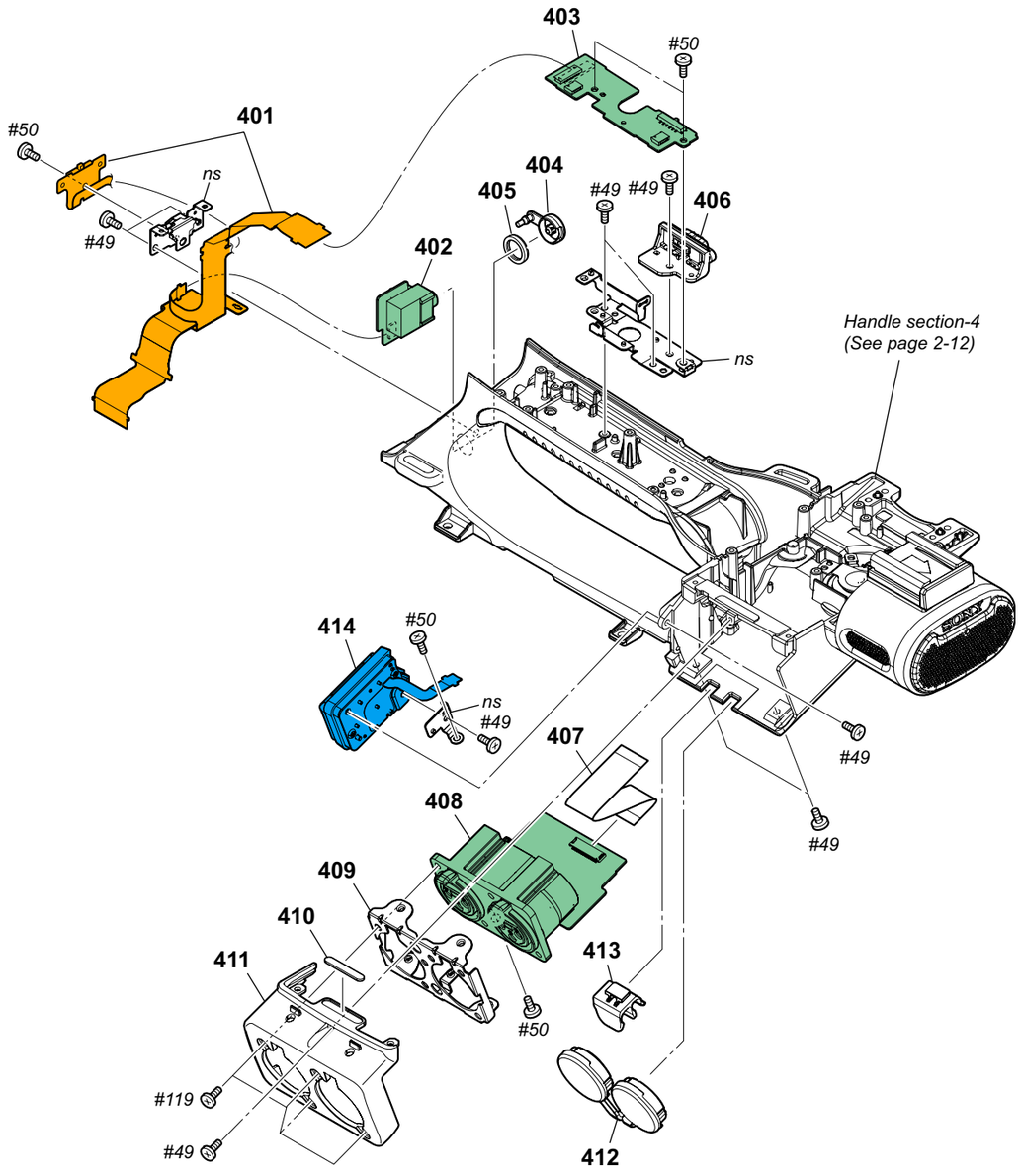

Ref. No.	Part No.	Description
401	A-1752-136-A	FP-1152 FLEXIBLE BOARD, COMPLETE
402	A-1752-114-A	HP-156 BOARD, COMPLETE
403	A-1752-123-A	HG-001 BOARD, COMPLETE
404	4-165-284-01	COVER, HP JACK
405	3-061-234-01	NUT (M6X0.5)
406	X-2188-599-1	KNOB ASSY, ZOOM SELECTION
407	1-834-244-11	FLEXIBLE FLAT CABLE (FFC-116)
408	A-1752-130-A	XL-011 BOARD, COMPLETE
* 409	4-165-279-01	BRACKET, XL
410	3-288-474-01	RUBBER, PANEL RETAINER

Ref. No.	Part No.	Description
411	4-165-282-01	COVER, XLR
412	4-165-285-01	COVER, XLR RUBBER
413	2-892-095-01	CLAMP, CABLE
414	1-480-870-11	SWITCH BLOCK, CONTROL (XS93000)
#49	2-630-005-31	SCREW (M2), NEW TRUSTER, P2
#50	2-891-494-11	SCREW (M2), NEW TRUSTER, P2
#119	7-627-556-58	SCREW +P 2.6X5

Screw

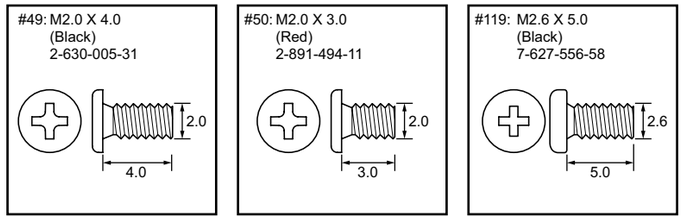

2-1-10. HANDLE SECTION-4

ns: not supplied

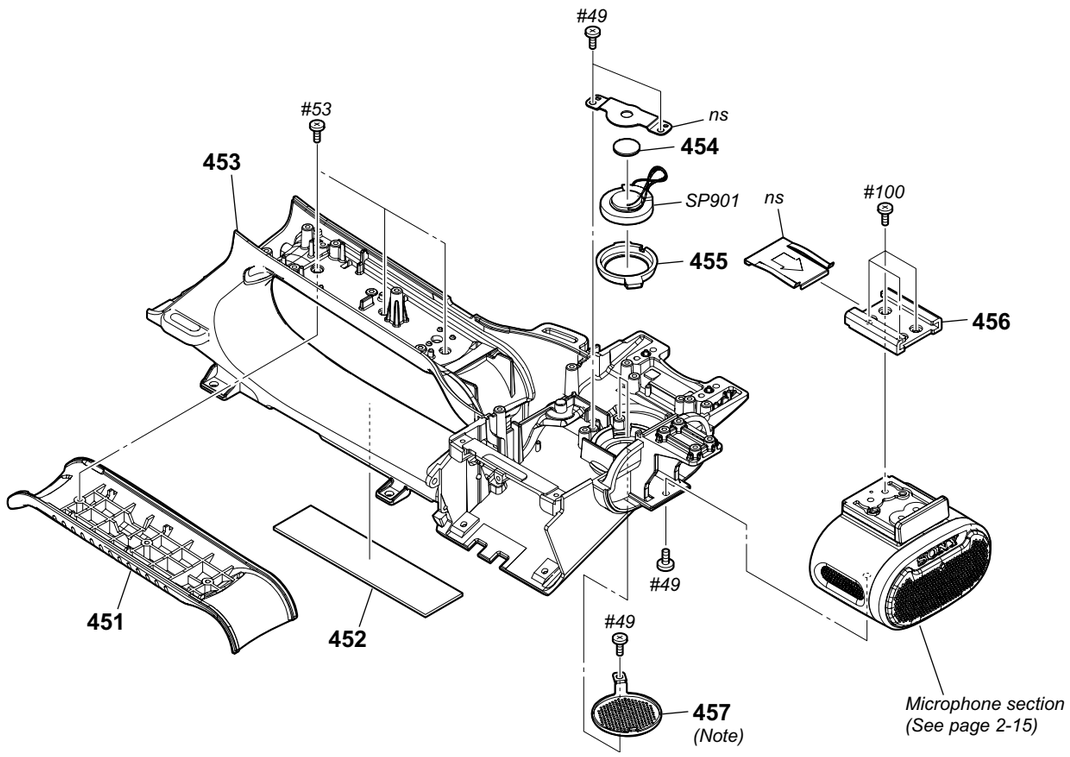

Ref. No.	Part No.	Description
451	4-165-278-01	GRIP
452	4-165-224-01	SHEET (6018T1), RADIATION
453	4-165-277-01	HANDLE
* 454	4-119-285-01	CUSHION, SPEAKER
455	2-178-550-01	HOLDER, SPEAKER

Ref. No.	Part No.	Description
456	3-069-286-03	SHOE, ACCESSORY
* 457	2-178-566-01	GRILLE, SPEAKER (Note)
SP901	1-825-968-11	LOUDSPEAKER (1.8CM)
#49	2-630-005-31	SCREW (M2), NEW TRUSTER, P2
#53	3-080-206-21	SCREW, TAPPING, P2
#100	3-080-203-51	SREW (M2), LOCK ACE, P2

Screw

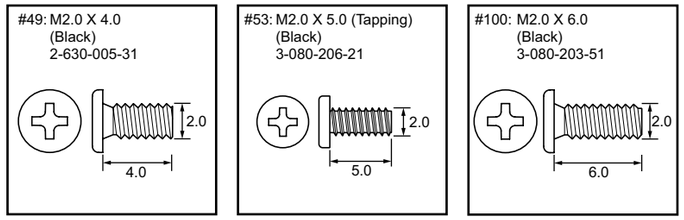

Note

Note: Refer to “Assembly-3: How to bent the Speaker Grille” when installing.

Note: 組立時は“Assembly-3: How to bent the Speaker Grille” を参照してください。

Ver. 1.1 2010.01
The changed portions from
Ver. 1.0 are shown in blue.

2-1-11. EVF SECTION

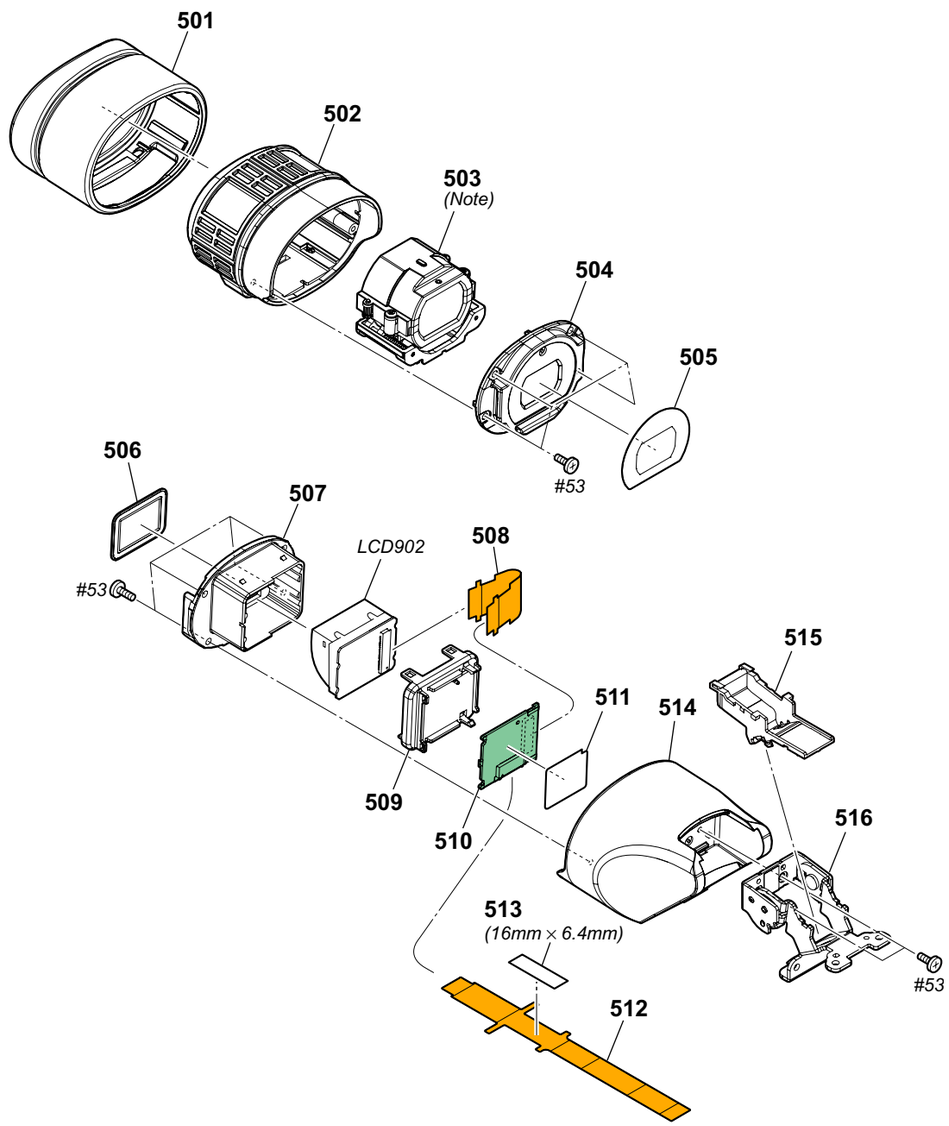

Ref. No.	Part No.	Description
501	4-119-301-01	EYE CUP (SMALL)
502	X-2320-885-1	EYE CUP (93000) ASSY
503	X-2320-861-1	LENS ASSY, VF (Note)
504	4-119-302-01	LID, EYE CUP CABINET
505	4-119-303-01	COVER, EYE CUP CABINET LID
506	3-288-591-01	SHEET, VF PROTECTION
507	3-288-585-01	CASE, PANEL
508	1-873-733-11	FP-776 FLEXIBLE BOARD
509	3-288-586-01	LID, PANEL
510	A-1752-131-A	VF-179 BOARD, COMPLETE

Ref. No.	Part No.	Description
* 511	3-299-948-01	SHEET (UU)
512	1-879-859-11	FP-1160 FLEXIBLE BOARD
513	CAUTION	TAPE, VF
514	X-2515-771-1	CABINET (94000) ASSY, VF
* 515	4-165-332-01	RETAINER, VF FLEXIBLE
516	X-2515-764-1	TILT ASSY, VF
LCD902	1-802-560-31	LCD MODULE
#53	3-080-206-21	SCREW, TAPPING, P2

Screw

#53: M2.0 X 5.0 (Tapping)
(Black)
3-080-206-21

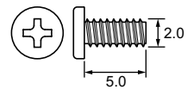

Note

Caution :
For the part of 513, cut NON WOVEN (T0.25) (3-076-631-01) into the desired length and use it.

Note: Refer to “Assembly-1: Confirm the Diopter Adjustment Lever is on the left side when installing the VF Lens Assy” when installing.

Caution:
513番は，ヒメロン T0.25 (3-076-631-01)を切って使用。

Note: 組立時は“Assembly-1: Confirm the Diopter Adjustment Lever is on the left side when installing the VF Lens Assy”を参照してください。

Ver. 1.1 2010.01
The changed portions from
Ver. 1.0 are shown in blue.

2-1-12. LCD SECTION

ns: not supplied

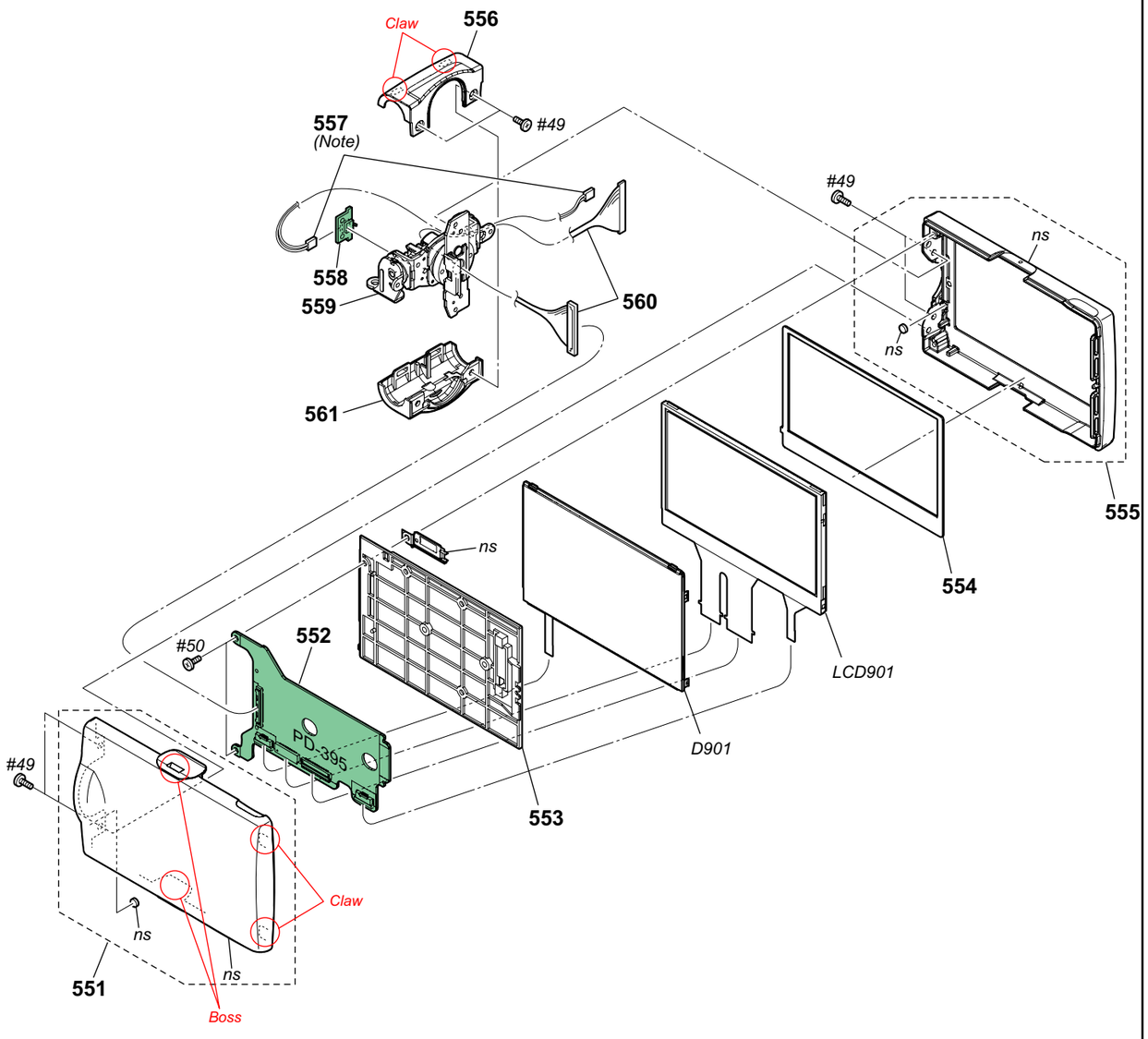

Ref. No.	Part No.	Description
551	X-2515-773-1	CABINET (UPPER (94000)) ASSY
552	A-1752-128-A	PD-395 BOARD, COMPLETE
* 553	4-165-311-01	FRAME, BL
554	3-288-565-11	CUSHION, PANEL
555	X-2515-774-1	LOWER (94000) ASSY, CABINET
556	3-288-566-01	CABINET (T), PANEL HINGE
557	1-963-030-21	HARNESS (SW-116) (Note)
558	A-1752-122-A	HT-003 BOARD, COMPLETE
559	X-2342-571-1	HINGE (TYPE 07KAI) ASSY, PANEL
560	1-965-937-21	HARNESS (COAXIAL CABLE)

Ref. No.	Part No.	Description
561	3-288-567-01	CABINET (B), PANEL HINGE
D901	1-480-358-11	BLOCK, LIGHT GUIDE PLATE (3.2)
LCD901	A-1734-177-A	TP BLOCK ASSY (32ESHGU09)
#49	2-630-005-31	SCREW (M2), NEW TRUSTER, P2
#50	2-891-494-11	SCREW (M2), NEW TRUSTER, P2

DISASSEMBLY

1. ○ points in left figure shows claws. Be careful when it removes.

Screw

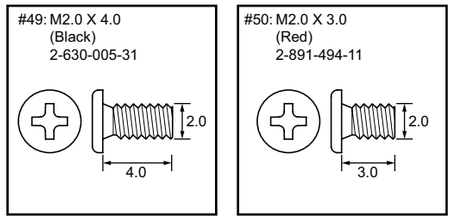

Note

Note: Refer to “Assembly-2: How to arrange Harnesses (SW-116)” when installing.

Note: 組立時は“Assembly-2: How to arrange Harnesses (SW-116)”を参照してください。

2-1-13. MICROPHONE SECTION

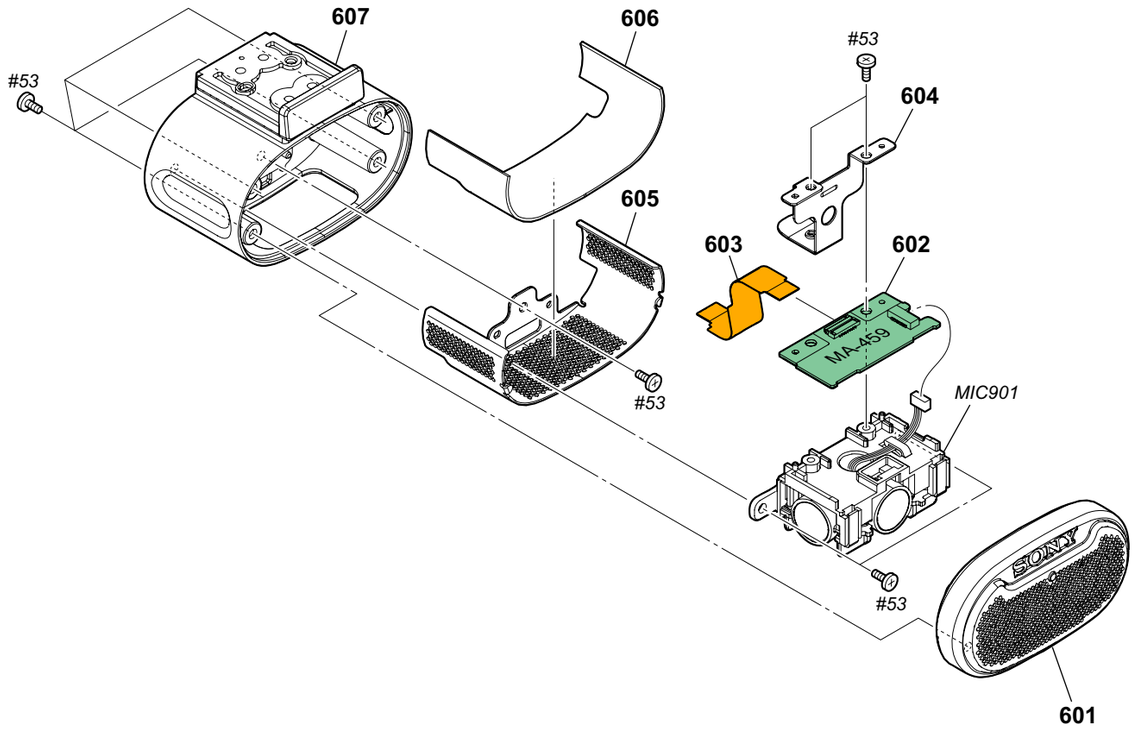

Ref. No.	Part No.	Description
601	X-2515-772-1	GRILLE (94000) ASSY, MICROPHONE
602	A-1752-117-A	MA-459 BOARD, COMPLETE
603	1-879-857-11	FP-1158 FLEXIBLE BOARD
* 604	4-165-302-01	SHEET METAL, MICROPHONE
605	4-165-303-01	GRILLE (REAR), MICROPHONE
606	4-165-304-01	SCREEN (REAR), WINDOW
607	4-165-301-01	CABINET (REAR), MICROPHONE
MIC901	1-542-808-11	MICROPHONE
#53	3-080-206-21	SCREW, TAPPING, P2

Screw

#53: M2.0 X 5.0 (Tapping)
(Black)
3-080-206-21

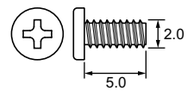

2-1-14. LENS SECTION

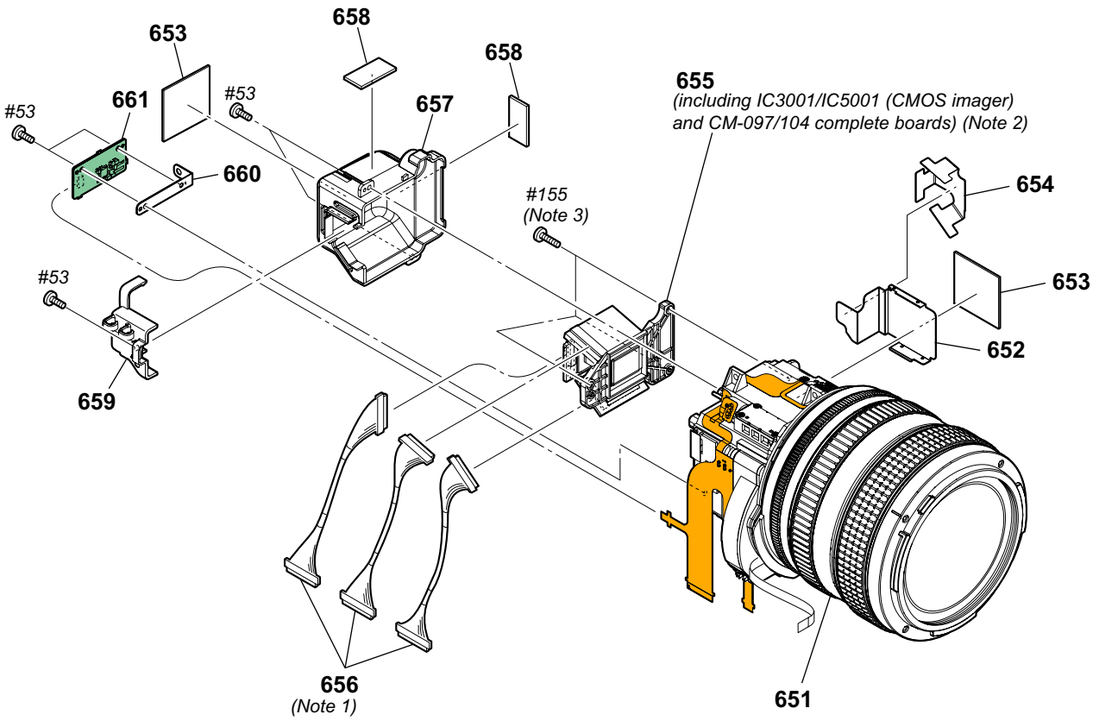

Ref. No.	Part No.	Description
651	1-788-775-31	LENS, VIDEO CF0022
* 652	4-119-361-01	HEAT SINK, LENS
653	4-119-362-01	SHEET (2828), LENS RADIATION
* 654	4-119-360-01	SHEET, CM RADIATION
655	A-1566-526-A	DEVICE (SERVICE), PRISM (including IC3001/IC5001 (CMOS imager) and CM-097/104 complete boards) (Note 2)

Ref. No.	Part No.	Description
656	1-966-281-11	HARNESS (COAXIAL CABLE) (Note 1)
* 657	4-119-357-01	COVER (A), LIGHT INTERCEPTION
658	4-119-356-01	SHEET (1122), LENS RADIATION
* 659	4-119-358-01	COVER (B), LIGHT INTERCEPTION
* 660	4-119-359-01	PLATE, GY GROUND
661	A-1759-066-A	GY-022 BOARD, COMPLETE (SERVICE)
#53	3-080-206-21	SCREW, TAPPING, P2
#155	3-080-204-31	SCREW, TAPPING, P2 (Note 3)

Screw

#53: M2.0 X 5.0 (Tapping)
(Black)
3-080-206-21

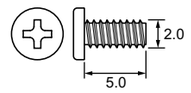

#155: M1.7 X 6.0 (Tapping)
(Black)
3-080-204-31

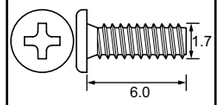

Note

Note1: Refer to page 2-2 “Note for disconnecting the harness (coaxial cable)” when changing the harness (coaxial cable).

Note2: Be sure to read “Precautions for Replacement of Imager”on page 6-1 when changing the imager.

Note1: ハーネス（同軸ケーブル）の交換時は2-2ページの“Note for disconnecting the harness (coaxial cable)”を参照してください。

Note2: イメージャの交換時は6-1ページの“イメージャ交換時の注意”を必ずお読みください。

Note 3: Prism Device cautions

Tighten screws in the following order.

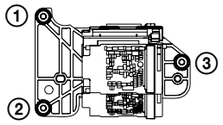

Be sure not to insert the harnesses forcefully.
(Standard: Insertion; 15N, Pull out; 10N)

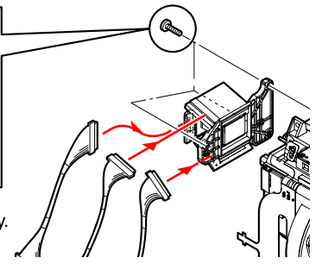

Note 3: プリズムデバイス取り外し組立時の注意

下記の順番でねじを締め付けてください。

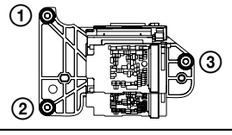

ハーネスを強く差し込まないでください。
（差し込み時：15N，引き抜き時：10N）

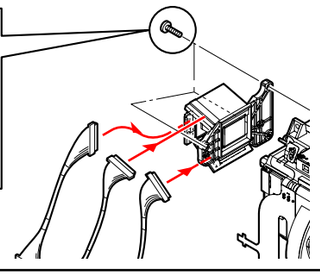

2-1-15. BT PANEL SECTION

ns: not supplied

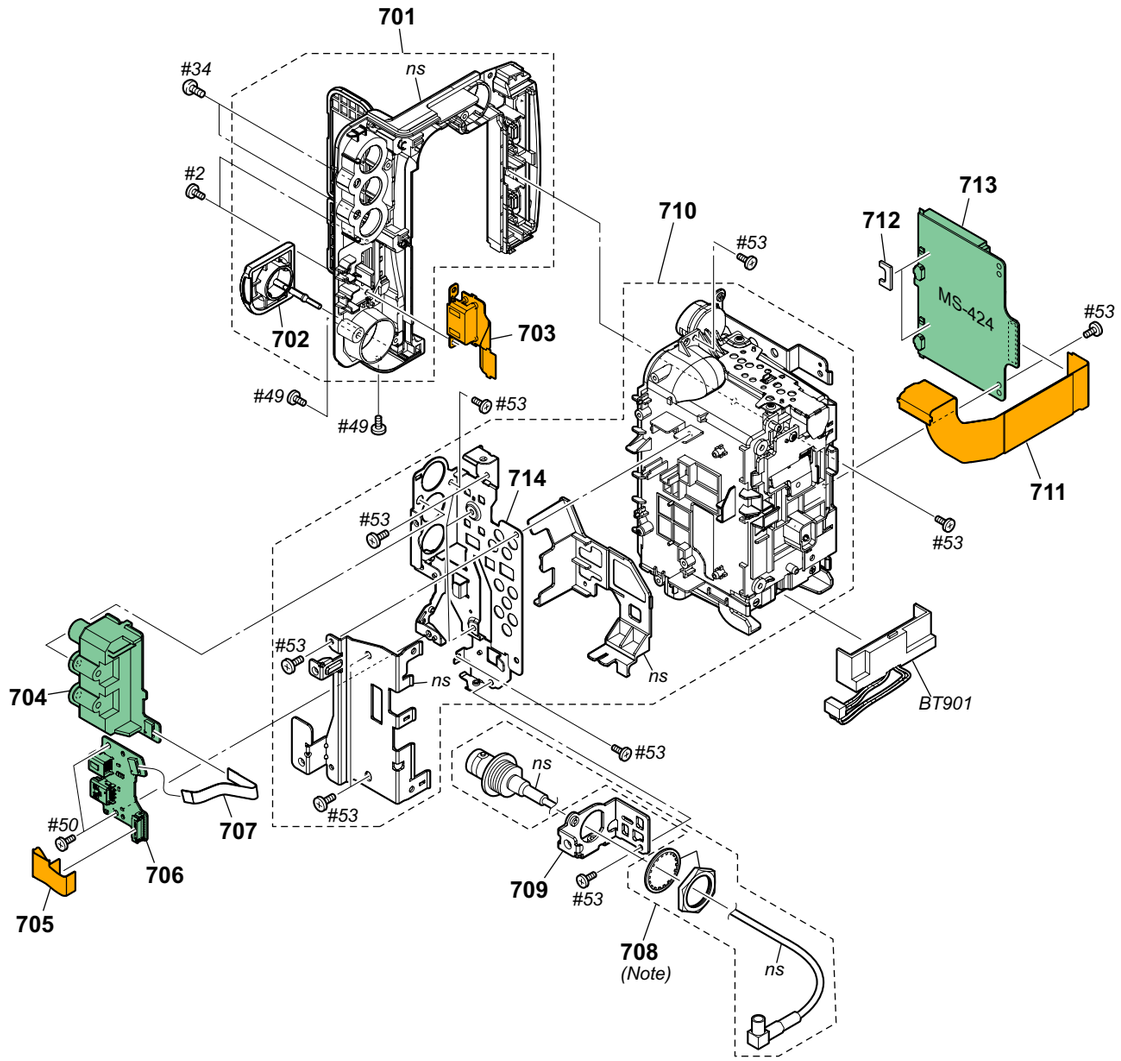

Ref. No.	Part No.	Description
701	X-2515-765-1	PANEL (94000) ASSY, BT
702	4-165-234-01	COVER, SDI JACK
703	A-1752-133-A	FP-1149 FLEXIBLE BOARD, COMPLETE
704	A-1752-099-A	CP-004 BOARD, COMPLETE
705	1-879-883-11	FP-1162 FLEXIBLE BOARD
706	A-1752-115-A	JK-392 BOARD, COMPLETE
707	1-837-240-11	CABLE, FLEXIBLE FLAT (FFC-194)
708	1-836-909-11	CABLE ASSY, COAXIAL (Note)
* 709	4-165-233-01	HOLDER, SDI
710	X-2515-780-1	HOLDER ASSY, BT

Ref. No.	Part No.	Description
711	1-879-854-11	FP-1155 FLEXIBLE BOARD
712	4-165-226-01	SHEET, MS LIGHT INTERCEPTION
713	A-1752-120-A	MS-424 BOARD, COMPLETE
714	4-165-269-01	HOLDER, JACK
⚠ BT901	1-694-411-12	TERMINAL BOARD, BATTERY
#2	2-635-562-31	SCREW (M1.7)
#34	3-077-331-41	+BV3 (3-CR)
#49	2-630-005-31	SCREW (M2), NEW TRUSTER, P2
#50	2-891-494-11	SCREW (M2), NEW TRUSTER, P2
#53	3-080-206-21	SCREW, TAPPING, P2

Screw

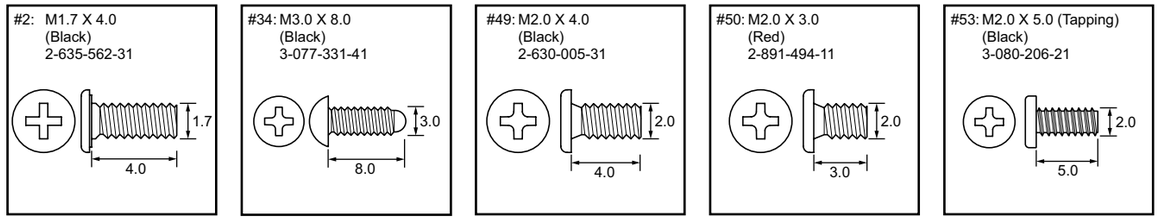

Note

Note: Connect and Disconnect the SDI Cable vertically.
Do not load to widthwise.

Note: SDI同軸ケーブルは垂直に抜き差ししてください。
横方向に力を加えないようにしてください。

Ver. 1.1 2010.01
The changed portions from
Ver. 1.0 are shown in blue.

• EXCEPT J MODEL

Checking supplied accessories.

Note : This item is supplied with the unit as an accessory, but is not prepared as a service part.

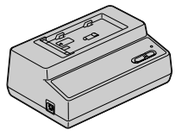

AC Adaptor/Charger
(AC-VL1)
⚠ 1-487-539-11

Power cord (mains lead)
⚠ 1-834-484-31 (NX5U)
⚠ 1-832-121-31 (NX5C)
⚠ 1-834-482-21 (NX5N/NX5E/NX5M/NX5P)

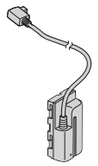

Connecting Cord (DK-415)
1-782-361-15 (EXCEPT NX5U)
1-782-361-21 (NX5U)

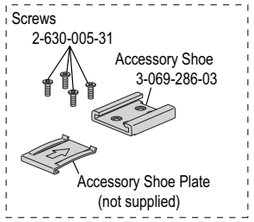

Accessory Shoe Kit
X-2188-877-2

Wireless Remote Commander
(RMT-845)
1-487-540-11

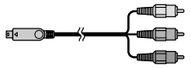

Component video cable
1-829-414-61

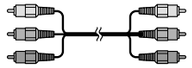

A/V connecting cable
1-828-145-21

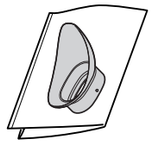

Large eyecup
X-2342-702-1

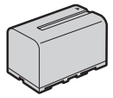

Rechargeable battery pack
(NP-F770) (NX5U)
(Note)

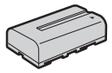

Rechargeable battery pack
(NP-F570)
(EXCEPT NX5U)
(Note)

Conversion (2P) Adaptor
⚠ 1-569-008-12 (NX5N)

Operating Guide
4-157-877-11 (ENGLISH) (NX5U/NX5N)
4-157-878-11 (ENGLISH) (NX5E/NX5P/NX5M)
4-157-878-21 (SIMPLIFIED CHINESE) (NX5C)

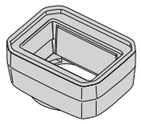

Lens hood with lens cover
(CF002)
X-2320-850-1

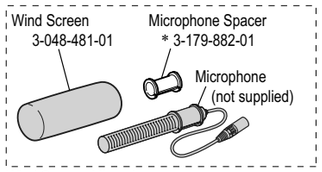

Wind Screen, Microphone
(ECM-XM1)
1-542-749-11

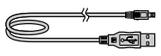

USB cable
1-829-868-31

CD-ROM
"Content Management Utility"
4-174-940-01

CD-ROM "Manuals for Digital HD Video Camera Recorder"
4-162-320-01

Operating Guide (PDF)

The CD-ROM supplied contains all of language version of the Operating Instructions(PDF) for printing.

- The printed matter is not supplied. If required, please order it with the part number below.

4-157-877-01 (JAPANESE)
4-157-877-11 (ENGLISH)
* 4-157-877-21 (FRENCH)

4-157-878-11 (ENGLISH)
4-157-878-21 (SIMPLIFIED CHINESE)
* 4-157-878-31 (FRENCH)
* 4-157-878-41 (SPANISH)
* 4-157-878-51 (ITALIAN)
* 4-157-878-61 (GERMAN)

• J MODEL

ワイヤレスリモコン
(RMT-845)
1-487-540-11

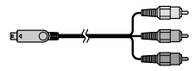

コンポーネントビデオケーブル
1-829-414-61

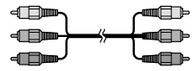

A/V接続ケーブル
1-828-145-21

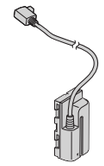

接続コード
(DK-415)
1-782-361-15

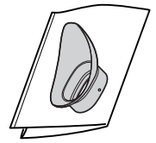

大型アイカップ
X-2342-702-1

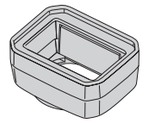

レンズカバー付きフード
(CF002)
X-2320-850-1

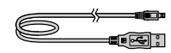

USBケーブル
1-829-868-31

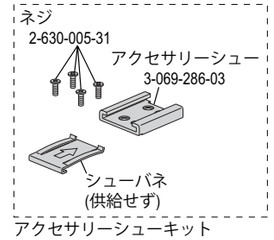

アクセサリーシューキット
X-2188-877-2

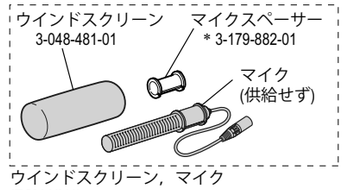

ウインドスクリーン，マイク
(ECM-XM1)
1-542-749-11

取扱説明書
4-157-877-01 (日本語)

CD-ROM
「"Content Management Utility"」
4-174-940-01

CD-ROM
「Manuals for Digital HD Video Camera Recorder」
4-162-320-01

取扱説明書 (PDF)

取扱説明書(PDF)は全ての言語が付属品のCD-ROMに含まれています。
CD-ROM内の取扱説明書(PDF)につきましては印刷しての供給は対応しておりません。

(ENGLISH)

NOTE:

- -XX, -X mean standardized parts, so they may have some differences from the original one.
- Items marked "*" are not stocked since they are seldom required for routine service. Some delay should be anticipated when ordering these items.
- The mechanical parts with no reference number in the exploded views are not supplied.
- Due to standardization, replacements in the parts list may be different from the parts specified in the diagrams or the components used on the set.
- CAPACITORS:
  uF: µF
- COILS
  uH: µH
- RESISTORS
  All resistors are in ohms.
  METAL: metal-film resistor
  METAL OXIDE: Metal Oxide-film resistor
  F: nonflammable
- SEMICONDUCTORS
  In each case, u: µ, for example:
  uA...: µA... , uPA... , µPA... ,
  uPB... , µPB... , uPC... , µPC... ,
  uPD..., µPD...

When indicating parts by reference number, please include the board name.

The components identified by mark ⚠ or dotted line with mark ⚠ are critical for safety.
Replace only with part number specified.

Les composants identifiés par une marque ⚠ sont critiques pour la sécurité.
Ne les remplacer que par un pièce portant le numéro spécifié.

Caution
Danger of explosion if battery is incorrectly replaced.
Replace only with the same or equivalent type.
Dispose of used batteries according to the instructions.

Note: Replace the battery holder (BH2001) together when replacing the lithium storage battery (BT2001) on the GC-012 board. (The battery holder removed once cannot be used again.) When mounting these parts, mount new battery holder first and attach new lithium storage battery next.

(JAPANESE)

【使用上の注意】

- ここに記載されている部品は，補修用部品であるため，回路図及びセットに付いている部品と異なる場合があります。
- -XX, -Xは標準化部品のため，セットに付いている部品と異なる場合があります。
- *印の部品は常備在庫しておりません。
- コンデンサの単位でuFはµFを示します。
- 抵抗の単位Ωは省略してあります。
  金　　被：金属被膜抵抗。
  サンキン：酸化金属被膜抵抗。
- インダクタの単位でuHはµHを示します。
- 半導体の名称でuA..., uPA..., uPB..., uPC..., uPD...等はそれぞれµA..., µPA..., µPB..., µPC..., µPD...を示します。

お願い
図面番号で部品を指定するときは基板名又はブロックを併せて指定してください。

⚠印の部品，または⚠印付の点線で囲まれた部品は，安全性を維持するために，重要な部品です。
従って交換時は，必ず指定の部品を使用してください。

Caution
電池の交換は，正しく行わないと破裂する恐れがあります。
電池を交換する場合には必ず同じ型名の電池又は同等品と交換してください。
使用済み電池は，取扱指示に従って処分してください。

ノート:
GC-012基板のリチウム蓄電池（BT2001）を交換する場合はバッテリホルダ(BH2001)も同時に新品に交換して下さい。
（一度使用したバッテリホルダは再使用できません。）
部品取り付けの際は，先にバッテリホルダを取り付けてからリチウム蓄電池を装着して下さい。

2-1. ELECTRICAL PARTS LIST

Ref. No.	Part No.	Description			
	A-1752-127-A	AS-063 BOARD, COMPLETE			
		**********			
		< CAPACITOR >			
C1501	1-125-777-11	CERAMIC CHIP	0.1uF	10%	10V
C1502	1-125-777-11	CERAMIC CHIP	0.1uF	10%	10V
C1503	1-125-777-11	CERAMIC CHIP	0.1uF	10%	10V
C1504	1-125-777-11	CERAMIC CHIP	0.1uF	10%	10V
C1505	1-165-908-11	CERAMIC CHIP	1uF	10%	10V
C1506	1-165-884-11	CERAMIC CHIP	2.2uF	10%	6.3V
C1507	1-125-777-11	CERAMIC CHIP	0.1uF	10%	10V
C1508	1-125-777-11	CERAMIC CHIP	0.1uF	10%	10V
C1509	1-165-989-11	CERAMIC CHIP	10uF	10%	6.3V
C1510	1-165-989-11	CERAMIC CHIP	10uF	10%	6.3V
C1511	1-125-777-11	CERAMIC CHIP	0.1uF	10%	10V
C1512	1-164-850-11	CERAMIC CHIP	10PF	0.5PF	50V
C1513	1-164-850-11	CERAMIC CHIP	10PF	0.5PF	50V
C1514	1-100-567-81	CERAMIC CHIP	0.01uF	10%	25V
C1515	1-100-567-81	CERAMIC CHIP	0.01uF	10%	25V
C1516	1-100-567-81	CERAMIC CHIP	0.01uF	10%	25V
C1517	1-100-567-81	CERAMIC CHIP	0.01uF	10%	25V
C1518	1-165-908-11	CERAMIC CHIP	1uF	10%	10V
C1519	1-165-908-11	CERAMIC CHIP	1uF	10%	10V
C1520	1-125-777-11	CERAMIC CHIP	0.1uF	10%	10V
C1521	1-165-884-11	CERAMIC CHIP	2.2uF	10%	6.3V
C1526	1-125-777-11	CERAMIC CHIP	0.1uF	10%	10V
C1527	1-125-777-11	CERAMIC CHIP	0.1uF	10%	10V
C1528	1-165-908-11	CERAMIC CHIP	1uF	10%	10V
		< CONNECTOR >			
CN1501	1-817-920-11	CONNECTOR, FPC (ZIF) 80P			
CN1502	1-816-654-61	FFC/FPC CONNECTOR (LIF) 6P			
CN1503	1-816-645-61	FFC/FPC CONNECTOR (LIF) 14P			
		< FERRITE BEAD >			
* FB1501	1-481-300-11	INDUCTOR, FERRITE BEAD			
* FB1502	1-481-300-11	INDUCTOR, FERRITE BEAD			
FB1503	1-400-354-11	INDUCTOR, FERRITE BEAD (1005)			
FB1504	1-400-354-11	INDUCTOR, FERRITE BEAD (1005)			
FB1505	1-400-354-11	INDUCTOR, FERRITE BEAD (1005)			
FB1506	1-400-354-11	INDUCTOR, FERRITE BEAD (1005)			
FB1507	1-400-354-11	INDUCTOR, FERRITE BEAD (1005)			
		< FILTER >			
FL1501	1-234-939-21	FILTER, EMI REMOVAL (SMD)			
FL1502	1-234-939-21	FILTER, EMI REMOVAL (SMD)			
		< IC >			
IC1501	6-713-638-01	IC BU19502KV-E2			
IC1502	6-703-977-01	IC R1114Q331D-TR-FA			
* IC1503	6-714-696-01	IC MAX8586ETA+T			
		< FILTER >			
LF1501	1-457-374-21	COMMOM MODE CHOKE COIL			
		< RESISTOR >			
R1501	1-218-940-11	METAL CHIP	82	5%	1/16W
R1502	1-218-940-11	METAL CHIP	82	5%	1/16W
R1503	1-218-940-11	METAL CHIP	82	5%	1/16W
R1504	1-218-940-11	METAL CHIP	82	5%	1/16W
R1505	1-218-940-11	METAL CHIP	82	5%	1/16W
R1506	1-218-933-11	METAL CHIP	22	5%	1/16W
R1507	1-218-940-11	METAL CHIP	82	5%	1/16W
R1508	1-218-933-11	METAL CHIP	22	5%	1/16W
R1509	1-218-940-11	METAL CHIP	82	5%	1/16W
R1510	1-218-940-11	METAL CHIP	82	5%	1/16W
R1511	1-218-933-11	METAL CHIP	22	5%	1/16W
R1512	1-218-935-11	METAL CHIP	33	5%	1/16W
R1513	1-218-935-11	METAL CHIP	33	5%	1/16W
R1514	1-218-935-11	METAL CHIP	33	5%	1/16W
R1515	1-218-935-11	METAL CHIP	33	5%	1/16W
R1516	1-218-935-11	METAL CHIP	33	5%	1/16W
R1517	1-218-935-11	METAL CHIP	33	5%	1/16W
R1518	1-218-935-11	METAL CHIP	33	5%	1/16W
R1519	1-218-935-11	METAL CHIP	33	5%	1/16W
R1520	1-218-935-11	METAL CHIP	33	5%	1/16W
R1521	1-218-935-11	METAL CHIP	33	5%	1/16W
R1522	1-218-935-11	METAL CHIP	33	5%	1/16W
R1523	1-218-935-11	METAL CHIP	33	5%	1/16W
R1524	1-218-935-11	METAL CHIP	33	5%	1/16W
R1525	1-218-935-11	METAL CHIP	33	5%	1/16W
R1526	1-218-935-11	METAL CHIP	33	5%	1/16W
R1527	1-218-935-11	METAL CHIP	33	5%	1/16W
R1528	1-218-953-11	METAL CHIP	1K	5%	1/16W
R1532	1-216-833-11	METAL CHIP	10K	5%	1/10W
R1533	1-208-911-11	METAL CHIP	10K	0.5%	1/16W
R1534	1-208-890-11	METAL CHIP	1.3K	0.5%	1/16W
R1535	1-218-989-11	METAL CHIP	1M	5%	1/16W
R1536	1-218-977-11	METAL CHIP	100K	5%	1/16W
R1545	1-208-721-11	METAL CHIP	39K	0.5%	1/16W
R1546	1-218-953-11	METAL CHIP	1K	5%	1/16W
R1549	1-218-990-81	SHORT CHIP	0		
R1551	1-216-864-11	SHORT CHIP	0		
		< VIBRATOR >			
X1501	1-813-210-11	VIBRATOR, CRYSTAL (NX5032GA) (25MHz)			
	A-1752-112-A	CK-218 BOARD, COMPLETE			
		**********			
		< CONNECTOR >			
* CN1001	1-779-335-51	CONNECTOR, FFC/FPC 22P			
* CN1002	1-779-331-51	CONNECTOR, FFC/FPC 14P			
CN1003	1-779-330-51	CONNECTOR, FFC/FPC 12P			
* CN1004	1-817-560-71	CONNECTOR, FPC (ZIP) 21P			
		< RESISTOR >			
R1001	1-218-970-11	METAL CHIP	27K	5%	1/16W
R1002	1-218-970-11	METAL CHIP	27K	5%	1/16W
R1003	1-218-970-11	METAL CHIP	27K	5%	1/16W
R1004	1-218-954-11	METAL CHIP	1.2K	5%	1/16W
R1005	1-218-964-11	METAL CHIP	8.2K	5%	1/16W
R1006	1-218-964-11	METAL CHIP	8.2K	5%	1/16W
R1007	1-218-964-11	METAL CHIP	8.2K	5%	1/16W
R1008	1-218-960-11	METAL CHIP	3.9K	5%	1/16W

Ver. 1.1 2010.01
The changed portions from Ver. 1.0 are shown in blue.

Ref. No.	Part No.	Description			
R1009	1-218-960-11	METAL CHIP	3.9K	5%	1/16W
R1010	1-218-960-11	METAL CHIP	3.9K	5%	1/16W
R1011	1-218-960-11	METAL CHIP	3.9K	5%	1/16W
R1012	1-218-957-11	METAL CHIP	2.2K	5%	1/16W
R1013	1-218-957-11	METAL CHIP	2.2K	5%	1/16W
R1014	1-218-957-11	METAL CHIP	2.2K	5%	1/16W
R1015	1-218-957-11	METAL CHIP	2.2K	5%	1/16W
R1016	1-218-955-11	METAL CHIP	1.5K	5%	1/16W
R1017	1-218-955-11	METAL CHIP	1.5K	5%	1/16W
R1018	1-218-955-11	METAL CHIP	1.5K	5%	1/16W
R1019	1-218-955-11	METAL CHIP	1.5K	5%	1/16W
R1020	1-218-954-11	METAL CHIP	1.2K	5%	1/16W
R1021	1-218-954-11	METAL CHIP	1.2K	5%	1/16W
R1022	1-218-954-11	METAL CHIP	1.2K	5%	1/16W
R1023	1-218-954-11	METAL CHIP	1.2K	5%	1/16W
		< VARISTOR >			
* VDR112	1-802-279-11	VARISTOR (SMD)			
* VDR113	1-802-279-11	VARISTOR (SMD)			

	A-1752-099-A	CP-004 BOARD, COMPLETE			
		**********			
		< CAPACITOR >			
C1503	1-164-935-11	CERAMIC CHIP	470PF	10%	50V
C1504	1-164-935-11	CERAMIC CHIP	470PF	10%	50V
		< CONNECTOR >			
CN1501	1-816-655-61	CONNECTOR, FFC/FPC 8P			
		< FERRITE BEAD >			
FB1501	1-400-331-11	FERRITE, EMI (SMD) (1005)			
FB1502	1-400-331-11	FERRITE, EMI (SMD) (1005)			
		< JACK >			
J1501	1-780-836-11	TERMINAL BOARD			
		< RESISTOR >			
R1501	1-218-990-81	SHORT CHIP	0		
R1502	1-218-965-11	METAL CHIP	10K	5%	1/16W
R1503	1-218-973-11	METAL CHIP	47K	5%	1/16W
		< VARISTOR >			
* VDR152	1-802-080-11	VARISTOR (SMD)			

	1-873-733-11	FP-776 FLEXIBLE BOARD			
		**********			

	A-1752-133-A	FP-1149 FLEXIBLE BOARD, COMPLETE			
		**********			

Ref. No.	Part No.	Description			
		< CONNECTOR >			
* CN102	1-819-696-21	CONNECTOR, HDMI			

	A-1752-134-A	FP-1150 FLEXIBLE BOARD, COMPLETE			
		**********			
		< CAPACITOR >			
C2001	1-127-760-11	CERAMIC CHIP	4.7uF	10%	6.3V
C2002	1-125-777-11	CERAMIC CHIP	0.1uF	10%	10V
C2003	1-125-777-11	CERAMIC CHIP	0.1uF	10%	10V
		< IC >			
IC2001	6-600-163-01	IC RS-770			
IC2002	6-600-513-11	IC TK60019CS8G0L			
IC2003	6-600-513-11	IC TK60019CS8G0L			
		< RESISTOR >			
R2001	1-216-805-11	METAL CHIP	47	5%	1/10W

	A-1752-135-A	FP-1151 FLEXIBLE BOARD, COMPLETE			
		**********			

(CN301 is not supplied, but this is included in FP-1151 Flexible board.)

		< CONNECTOR >			
CN301	(Not supplied)	CONNECTOR, MULTIPLE (SOCKET)			

(CN301 is supplied included in FP-1151 complete flexible board.)

	A-1752-136-A	FP-1152 FLEXIBLE BOARD, COMPLETE			
		**********			
		< RESISTOR >			
R401	1-218-954-11	METAL CHIP	1.2K	5%	1/16W
		< SWITCH >			
S401	1-771-487-11	SWITCH, SLIDE			

	1-879-854-11	FP-1155 FLEXIBLE BOARD			
		**********			

	1-879-855-11	FP-1156 FLEXIBLE BOARD			
		**********			

	1-879-856-12	FP-1157 FLEXIBLE BOARD			
		**********			

	1-879-857-11	FP-1158 FLEXIBLE BOARD			
		**********			

Ref. No.	Part No.	Description			
	1-879-858-11	FP-1159 FLEXIBLE BOARD			
		**********			

	1-879-859-11	FP-1160 FLEXIBLE BOARD			
		**********			

	1-879-860-11	FP-1161 FLEXIBLE BOARD			
		**********			

	1-879-883-11	FP-1162 FLEXIBLE BOARD			
		**********			

	A-1752-113-A	GC-012 BOARD, COMPLETE			
		**********			

(BT2001 is not included in GC-012 complete board.)

		< BATTERY HOLDER >			
⚠ BH2001	1-756-615-61	HOLDER, BATTERY (Note)			
		< BATTERY >			
⚠ BT2001	1-756-134-12	BATTERY, STORAGE, LITHIUM (Note)			
		< CAPACITOR >			
C2001	1-164-939-11	CERAMIC CHIP	0.0022uF	10%	50V
C2002	1-165-989-11	CERAMIC CHIP	10uF	10%	6.3V
C2003	1-165-989-11	CERAMIC CHIP	10uF	10%	6.3V
C2004	1-100-581-81	CERAMIC CHIP	0.0047uF	10%	50V
C2005	1-164-935-11	CERAMIC CHIP	470PF	10%	50V
C2008	1-125-777-11	CERAMIC CHIP	0.1uF	10%	10V
C2009	1-165-989-11	CERAMIC CHIP	10uF	10%	6.3V
C2010	1-165-989-11	CERAMIC CHIP	10uF	10%	6.3V
C2012	1-100-581-81	CERAMIC CHIP	0.0047uF	10%	50V
C2013	1-165-989-11	CERAMIC CHIP	10uF	10%	6.3V
C2014	1-128-709-21	TANTAL. CHIP	68uF	20%	10V
C2015	1-125-777-11	CERAMIC CHIP	0.1uF	10%	10V
C2016	1-128-964-91	TANTAL. CHIP	100uF	20%	6.3V
C2017	1-128-964-91	TANTAL. CHIP	100uF	20%	6.3V
		< CONNECTOR >			
* CN2001	1-779-333-51	CONNECTOR, FFC/FPC 18P			
CN2002	1-779-328-51	CONNECTOR, FFC/FPC 8P			
* CN2004	1-779-329-51	CONNECTOR, FFC/FPC 10P			
* CN2005	1-779-327-51	CONNECTOR, FFC/FPC 6P			
		< DIODE >			
D2001	8-719-074-67	DIODE EDZFJ-TE61-5.6B			
D2002	8-719-083-91	DIODE EDZFJ-TE61-6.8B			
		< IC >			
IC2001	8-759-058-62	IC TC7S08FU (TE85R)			
IC2003	8-759-678-15	IC TLV2231CDBVR			
IC2004	8-759-369-73	IC NJM4556AM			
		< RESISTOR >			

Ref. No.	Part No.	Description			
R2006	1-208-905-11	METAL CHIP	5.6K	0.5%	1/16W
R2008	1-218-941-81	METAL CHIP	100	5%	1/16W
R2011	1-218-990-81	SHORT CHIP	0		
R2012	1-208-713-11	METAL CHIP	18K	0.5%	1/16W
R2013	1-208-911-11	METAL CHIP	10K	0.5%	1/16W
R2014	1-208-911-11	METAL CHIP	10K	0.5%	1/16W
R2015	1-208-935-11	METAL CHIP	100K	0.5%	1/16W
R2016	1-208-935-11	METAL CHIP	100K	0.5%	1/16W
R2017	1-218-955-11	METAL CHIP	1.5K	5%	1/16W
R2018	1-218-956-11	METAL CHIP	1.8K	5%	1/16W
R2019	1-218-944-11	METAL CHIP	180	5%	1/16W
R2020	1-218-944-11	METAL CHIP	180	5%	1/16W
R2023	1-218-963-11	METAL CHIP	6.8K	5%	1/16W
R2024	1-218-963-11	METAL CHIP	6.8K	5%	1/16W
R2025	1-218-943-11	METAL CHIP	150	5%	1/16W
R2026	1-218-943-11	METAL CHIP	150	5%	1/16W
R2028	1-208-935-11	METAL CHIP	100K	0.5%	1/16W
R2029	1-218-949-11	METAL CHIP	470	5%	1/16W
		< VARISTOR >			
* VDR201	1-802-279-11	VARISTOR (SMD)			
* VDR203	1-802-279-11	VARISTOR (SMD)			
* VDR205	1-802-279-11	VARISTOR (SMD)			

	A-1752-124-A	GS-010 BOARD, COMPLETE (EXCEPT NX5C/NX5M)			
		**********			
		< CONNECTOR >			
CN8001	1-816-654-61	FFC/FPC CONNECTOR (LIF) 6P			
		< SWITCH >			
S8001	1-771-731-21	SWITCH, SLIDE			

	A-1759-066-A	GY-022 BOARD, COMPLETE (SERVICE)			
		**********			
		< CAPACITOR >			
C8501	1-165-989-11	CERAMIC CHIP	10uF	10%	6.3V
C8502	1-100-611-91	CERAMIC CHIP	22uF	20%	6.3V
C8503	1-100-611-91	CERAMIC CHIP	22uF	20%	6.3V
C8504	1-125-777-11	CERAMIC CHIP	0.1uF	10%	10V
C8505	1-114-411-21	CERAMIC CHIP	0.33uF	10%	6.3V
C8506	1-114-411-21	CERAMIC CHIP	0.33uF	10%	6.3V
C8507	1-165-989-11	CERAMIC CHIP	10uF	10%	6.3V
C8508	1-165-989-11	CERAMIC CHIP	10uF	10%	6.3V
C8509	1-119-923-11	CERAMIC CHIP	0.047uF	10%	10V
C8510	1-119-923-11	CERAMIC CHIP	0.047uF	10%	10V
C8511	1-119-923-11	CERAMIC CHIP	0.047uF	10%	10V
C8512	1-125-777-11	CERAMIC CHIP	0.1uF	10%	10V
C8513	1-119-923-11	CERAMIC CHIP	0.047uF	10%	10V
C8514	1-125-777-11	CERAMIC CHIP	0.1uF	10%	10V
C8515	1-125-777-11	CERAMIC CHIP	0.1uF	10%	10V
C8516	1-125-777-11	CERAMIC CHIP	0.1uF	10%	10V
C8517	1-125-777-11	CERAMIC CHIP	0.1uF	10%	10V

Ref. No.	Part No.	Description			
C8518	1-125-777-11	CERAMIC CHIP	0.1uF	10%	10V
C8519	1-125-777-11	CERAMIC CHIP	0.1uF	10%	10V
C8520	1-165-989-11	CERAMIC CHIP	10uF	10%	6.3V
C8521	1-165-989-11	CERAMIC CHIP	10uF	10%	6.3V
C8522	1-165-989-11	CERAMIC CHIP	10uF	10%	6.3V
		< CONNECTOR >			
CN8501	1-816-655-61	CONNECTOR, FFC/FPC 8P			
		< IC >			
* IC8501	8-753-284-38	IC CXA3739AER-T2			
		< RESISTOR >			
R8509	1-208-943-11	METAL CHIP	220K	0.5%	1/16W
R8510	1-208-943-11	METAL CHIP	220K	0.5%	1/16W
R8511	1-208-911-11	METAL CHIP	10K	0.5%	1/16W
R8512	1-208-911-11	METAL CHIP	10K	0.5%	1/16W
R8513	1-208-711-11	METAL CHIP	15K	0.5%	1/16W
R8514	1-208-711-11	METAL CHIP	15K	0.5%	1/16W
R8515	1-218-969-11	METAL CHIP	22K	5%	1/16W
R8516	1-218-969-11	METAL CHIP	22K	5%	1/16W
R8517	1-218-969-11	METAL CHIP	22K	5%	1/16W
R8518	1-218-969-11	METAL CHIP	22K	5%	1/16W
R8529	1-218-990-81	SHORT CHIP	0		
R8530	1-218-990-81	SHORT CHIP	0		
		< SENSOR >			
* SE8501	1-480-218-11	SENSOR, ANGULAR VELOCITY (31.2kHz) (PITCH)			
* SE8502	1-479-022-61	SENSOR, ANGULAR VELOCITY (32.2kHz) (YAW)			

	A-1752-123-A	HG-001 BOARD, COMPLETE			
		**********			
		< CAPACITOR >			
C7811	1-100-539-91	TANTAL. CHIP	47uF	20%	6.3V
C7813	1-165-908-11	CERAMIC CHIP	1uF	10%	10V
		< CONNECTOR >			
* CN7801	1-817-544-71	CONNECTOR, FPC (ZIF) 39P			
CN7802	1-816-654-61	FFC/FPC CONNECTOR (LIF) 6P			
* CN7803	1-817-829-81	CONNECTOR, FPC (ZIF) 27P			
CN7804	1-816-654-61	FFC/FPC CONNECTOR (LIF) 6P			
		< FILTER >			
FL7801	1-234-939-21	FILTER, EMI REMOVAL (SMD)			
		< RESISTOR >			
R7801	1-218-970-11	METAL CHIP	27K	5%	1/16W
R7802	1-218-968-11	METAL CHIP	18K	5%	1/16W
R7821	1-218-990-81	SHORT CHIP	0		
R7823	1-218-990-81	SHORT CHIP	0		
R7824	1-218-977-11	METAL CHIP	100K	5%	1/16W
R7825	1-218-963-11	METAL CHIP	6.8K	5%	1/16W
		< SWITCH >			
S7801	1-771-487-11	SWITCH, SLIDE			

	A-1752-114-A	HP-156 BOARD, COMPLETE			
		**********			
		< CAPACITOR >			
C3001	1-164-937-11	CERAMIC CHIP	0.001uF	10%	50V
C3002	1-164-937-11	CERAMIC CHIP	0.001uF	10%	50V
C3004	1-100-581-81	CERAMIC CHIP	0.0047uF	10%	50V
C3005	1-100-581-81	CERAMIC CHIP	0.0047uF	10%	50V
		< CONNECTOR >			
CN3001	1-816-655-61	CONNECTOR, FFC/FPC 8P			
		< DIODE >			
D3004	6-502-193-01	DIODE SML-D12V8WT86SN			
		< FERRITE BEAD >			
* FB3001	1-481-300-11	INDUCTOR, FERRITE BEAD			
* FB3002	1-481-300-11	INDUCTOR, FERRITE BEAD			
		< JACK >			
J3001	1-794-525-12	JACK, MIC			
		< COIL >			
* L3001	1-481-381-21	INDUCTOR	100uH		
* L3002	1-481-381-21	INDUCTOR	100uH		
		< TRANSISTOR >			
Q3001	6-551-630-01	TRANSISTOR	RN1102MFV (TL3SONY)		
		< RESISTOR >			
R3002	1-218-990-81	SHORT CHIP	0		
R3003	1-218-938-11	METAL CHIP	56	5%	1/16W
R3005	1-218-953-11	METAL CHIP	1K	5%	1/16W

	A-1752-122-A	HT-003 BOARD, COMPLETE			
		**********			
		< CONNECTOR >			
CN7401	1-794-375-21	PIN, CONNECTOR 2P			
		< SWITCH >			
S7401	1-786-180-11	SWITCH, PUSH (1KEY)			

	A-1752-115-A	JK-392 BOARD, COMPLETE			
		**********			
		< CONNECTOR >			
CN4001	1-819-780-61	CONNECTOR, FPC (ZIF) 27P			
CN4002	1-794-962-11	CONNECTOR, SQUARE TYPE (USB 5P)			
CN4003	1-818-607-12	CONNECTOR, SQUARE TYPE 10P			
CN4004	1-816-655-61	CONNECTOR, FFC/FPC 8P			
		< RESISTOR >			
R4010	1-218-965-11	METAL CHIP	10K	5%	1/16W
		< VARISTOR >			
* VDR401	1-802-279-11	VARISTOR (SMD)			
* VDR402	1-802-279-11	VARISTOR (SMD)			
* VDR403	1-802-279-11	VARISTOR (SMD)			

	A-1752-116-A	KY-115 BOARD, COMPLETE			
		**********			
		< CONNECTOR >			
CN4501	1-816-655-61	CONNECTOR, FFC/FPC 8P			
		< RESISTOR >			
R4502	1-218-954-11	METAL CHIP	1.2K	5%	1/16W
R4503	1-218-954-11	METAL CHIP	1.2K	5%	1/16W
R4504	1-218-954-11	METAL CHIP	1.2K	5%	1/16W
R4505	1-218-955-11	METAL CHIP	1.5K	5%	1/16W
R4506	1-218-955-11	METAL CHIP	1.5K	5%	1/16W
R4507	1-218-955-11	METAL CHIP	1.5K	5%	1/16W
R4508	1-218-957-11	METAL CHIP	2.2K	5%	1/16W
R4509	1-218-957-11	METAL CHIP	2.2K	5%	1/16W
R4510	1-218-957-11	METAL CHIP	2.2K	5%	1/16W
R4511	1-218-960-11	METAL CHIP	3.9K	5%	1/16W
R4512	1-218-960-11	METAL CHIP	3.9K	5%	1/16W
R4513	1-218-960-11	METAL CHIP	3.9K	5%	1/16W
R4514	1-218-964-11	METAL CHIP	8.2K	5%	1/16W
R4515	1-218-964-11	METAL CHIP	8.2K	5%	1/16W
R4516	1-218-964-11	METAL CHIP	8.2K	5%	1/16W
R4517	1-218-970-11	METAL CHIP	27K	5%	1/16W
R4518	1-218-970-11	METAL CHIP	27K	5%	1/16W
		< SWITCH >			
S4501	1-786-157-31	TACTILE SWITCH			
S4502	1-786-157-31	TACTILE SWITCH			
S4503	1-786-157-31	TACTILE SWITCH			
S4504	1-786-157-31	TACTILE SWITCH			
S4505	1-786-157-31	TACTILE SWITCH			
S4506	1-786-157-31	TACTILE SWITCH			
S4507	1-786-157-31	TACTILE SWITCH			
S4508	1-786-157-31	TACTILE SWITCH			
S4509	1-786-157-31	TACTILE SWITCH			
S4510	1-786-157-31	TACTILE SWITCH			
S4511	1-786-157-31	TACTILE SWITCH			
S4512	1-786-157-31	TACTILE SWITCH			
S4513	1-786-157-31	TACTILE SWITCH			
S4514	1-786-157-31	TACTILE SWITCH			
S4515	1-786-157-31	TACTILE SWITCH			
S4516	1-786-157-31	TACTILE SWITCH			
S4517	1-786-157-31	TACTILE SWITCH			
S4518	1-786-157-31	TACTILE SWITCH			
S4519	1-786-157-31	TACTILE SWITCH			
S4520	1-786-157-31	TACTILE SWITCH			
S4521	1-786-157-31	TACTILE SWITCH			
		< VARISTOR >			
* VDR001	1-802-279-11	VARISTOR (SMD)			
* VDR002	1-802-279-11	VARISTOR (SMD)			
* VDR003	1-802-279-11	VARISTOR (SMD)			
* VDR004	1-802-279-11	VARISTOR (SMD)			

	A-1752-117-A	MA-459 BOARD, COMPLETE			
		**********			
		< CAPACITOR >			
C5001	1-164-874-11	CERAMIC CHIP	100PF	5%	50V
C5002	1-164-874-11	CERAMIC CHIP	100PF	5%	50V
C5003	1-164-874-11	CERAMIC CHIP	100PF	5%	50V
C5004	1-165-908-11	CERAMIC CHIP	1uF	10%	10V
C5005	1-165-908-11	CERAMIC CHIP	1uF	10%	10V
C5006	1-165-908-11	CERAMIC CHIP	1uF	10%	10V
C5007	1-100-611-91	CERAMIC CHIP	22uF	20%	6.3V
C5010	1-165-884-11	CERAMIC CHIP	2.2uF	10%	6.3V
C5011	1-165-884-11	CERAMIC CHIP	2.2uF	10%	6.3V
C5012	1-165-884-11	CERAMIC CHIP	2.2uF	10%	6.3V
C5013	1-100-567-81	CERAMIC CHIP	0.01uF	10%	25V
C5016	1-100-611-91	CERAMIC CHIP	22uF	20%	6.3V
C5017	1-100-743-91	CERAMIC CHIP	2.2uF	20%	16V
		< CONNECTOR >			
CN5001	1-817-054-21	PIN, CONNECTOR 6P			
* CN5002	1-817-697-51	CONNECTOR, FPC (ZIF) 19P			
		< DIODE >			
D5001	6-502-193-01	DIODE SML-D12V8WT86SN			
		< IC >			
IC5001	8-759-422-21	IC NJM4580V (TE2)			
IC5002	8-759-422-21	IC NJM4580V (TE2)			
		< TRANSISTOR >			
Q5001	6-551-630-01	TRANSISTOR	RN1102MFV (TL3SONY)		
		< RESISTOR >			
R5001	1-208-697-11	METAL CHIP	3.9K	0.5%	1/16W
R5002	1-208-697-11	METAL CHIP	3.9K	0.5%	1/16W
R5003	1-208-697-11	METAL CHIP	3.9K	0.5%	1/16W
R5004	1-208-935-11	METAL CHIP	100K	0.5%	1/16W
R5005	1-208-935-11	METAL CHIP	100K	0.5%	1/16W
R5006	1-208-935-11	METAL CHIP	100K	0.5%	1/16W
R5007	1-218-855-11	METAL CHIP	2.2K	0.5%	1/10W
R5008	1-218-855-11	METAL CHIP	2.2K	0.5%	1/10W
R5009	1-218-855-11	METAL CHIP	2.2K	0.5%	1/10W
R5010	1-218-855-11	METAL CHIP	2.2K	0.5%	1/10W
R5011	1-218-855-11	METAL CHIP	2.2K	0.5%	1/10W
R5012	1-218-855-11	METAL CHIP	2.2K	0.5%	1/10W
R5015	1-218-945-11	METAL CHIP	220	5%	1/16W
R5016	1-218-977-11	METAL CHIP	100K	5%	1/16W
R5017	1-218-976-11	METAL CHIP	82K	5%	1/16W
R5018	1-218-941-81	METAL CHIP	100	5%	1/16W
R5019	1-218-941-81	METAL CHIP	100	5%	1/16W

Ref. No.	Part No.	Description			
R5020	1-218-941-81	METAL CHIP	100	5%	1/16W
R5021	1-218-446-11	METAL CHIP	1	5%	1/10W
R5022	1-218-938-11	METAL CHIP	56	5%	1/16W
R5024	1-218-941-81	METAL CHIP	100	5%	1/16W

	A-1752-120-A	MS-424 BOARD, COMPLETE
		**********
		< CAPACITOR >
C5518	1-165-989-11	CERAMIC CHIP 10uF 10% 6.3V
C5519	1-165-989-11	CERAMIC CHIP 10uF 10% 6.3V
C5520	1-125-777-11	CERAMIC CHIP 0.1uF 10% 10V
C5521	1-125-777-11	CERAMIC CHIP 0.1uF 10% 10V
C5522	1-165-908-11	CERAMIC CHIP 1uF 10% 10V
C5523	1-165-908-11	CERAMIC CHIP 1uF 10% 10V
C5524	1-125-777-11	CERAMIC CHIP 0.1uF 10% 10V
C5525	1-125-777-11	CERAMIC CHIP 0.1uF 10% 10V
C5526	1-165-908-11	CERAMIC CHIP 1uF 10% 10V
C5527	1-165-908-11	CERAMIC CHIP 1uF 10% 10V
		< CONNECTOR >
* CN5501	1-821-501-11	CONNECTOR, FPC (ZIF) 51P
CN5502	1-822-837-21	CARD CONNECTOR
CN5503	1-822-837-21	CARD CONNECTOR
		< DIODE >
D5501	6-502-193-01	DIODE SML-D12V8WT86SN
D5502	6-500-594-01	DIODE CL-196SYG-CD-T
D5503	6-502-193-01	DIODE SML-D12V8WT86SN
D5504	6-500-594-01	DIODE CL-196SYG-CD-T
* D5505	6-502-947-01	DIODE RB751CS-40T2R
* D5506	6-502-947-01	DIODE RB751CS-40T2R
* D5507	6-502-947-01	DIODE RB751CS-40T2R
* D5508	6-502-947-01	DIODE RB751CS-40T2R
* D5509	6-502-947-01	DIODE RB751CS-40T2R
		< FERRITE BEAD >
FB5501	1-469-580-21	INDUCTOR, FERRITE BEAD (1005)
FB5502	1-469-580-21	INDUCTOR, FERRITE BEAD (1005)
FB5503	1-469-580-21	INDUCTOR, FERRITE BEAD (1005)
FB5504	1-469-580-21	INDUCTOR, FERRITE BEAD (1005)
FB5505	1-469-580-21	INDUCTOR, FERRITE BEAD (1005)
FB5506	1-469-580-21	INDUCTOR, FERRITE BEAD (1005)
FB5507	1-469-580-21	INDUCTOR, FERRITE BEAD (1005)
FB5508	1-469-580-21	INDUCTOR, FERRITE BEAD (1005)
FB5509	1-469-580-21	INDUCTOR, FERRITE BEAD (1005)
FB5510	1-469-580-21	INDUCTOR, FERRITE BEAD (1005)
FB5511	1-469-580-21	INDUCTOR, FERRITE BEAD (1005)
FB5512	1-469-580-21	INDUCTOR, FERRITE BEAD (1005)
		< IC >
IC5501	8-759-058-62	IC TC7S08FU (TE85R)
IC5502	8-759-058-62	IC TC7S08FU (TE85R)
* IC5508	6-712-135-01	IC R1173H001D-T1-F
* IC5509	6-714-502-01	IC BD2224G-TR
* IC5510	6-714-502-01	IC BD2224G-TR
* IC5511	6-714-502-01	IC BD2224G-TR

Ref. No.	Part No.	Description			
* IC5512	6-714-502-01	IC BD2224G-TR			
		< TRANSISTOR >			
Q5501	6-551-631-01	TRANSISTOR	RN1104MFV (TL3SONY)		
Q5502	6-551-631-01	TRANSISTOR	RN1104MFV (TL3SONY)		
		< RESISTOR >			
R5507	1-218-954-11	METAL CHIP	1.2K	5%	1/16W
R5508	1-218-945-11	METAL CHIP	220	5%	1/16W
R5509	1-218-945-11	METAL CHIP	220	5%	1/16W
R5510	1-218-945-11	METAL CHIP	220	5%	1/16W
R5511	1-218-945-11	METAL CHIP	220	5%	1/16W
R5522	1-218-990-81	SHORT CHIP	0		
R5523	1-218-941-81	METAL CHIP	100	5%	1/16W
R5524	1-218-941-81	METAL CHIP	100	5%	1/16W
R5525	1-218-941-81	METAL CHIP	100	5%	1/16W
R5526	1-218-941-81	METAL CHIP	100	5%	1/16W
R5527	1-218-941-81	METAL CHIP	100	5%	1/16W
R5551	1-218-941-81	METAL CHIP	100	5%	1/16W
R5552	1-218-941-81	METAL CHIP	100	5%	1/16W
R5555	1-218-939-11	METAL CHIP	68	5%	1/16W
R5556	1-218-935-11	METAL CHIP	33	5%	1/16W
R5557	1-218-941-81	METAL CHIP	100	5%	1/16W
R5558	1-218-941-81	METAL CHIP	100	5%	1/16W
R5564	1-218-939-11	METAL CHIP	68	5%	1/16W
R5565	1-218-941-81	METAL CHIP	100	5%	1/16W
R5566	1-218-941-81	METAL CHIP	100	5%	1/16W
R5567	1-218-941-81	METAL CHIP	100	5%	1/16W
R5568	1-218-941-81	METAL CHIP	100	5%	1/16W
R5569	1-218-935-11	METAL CHIP	33	5%	1/16W
R5581	1-218-977-11	METAL CHIP	100K	5%	1/16W
R5582	1-218-977-11	METAL CHIP	100K	5%	1/16W
R5583	1-218-977-11	METAL CHIP	100K	5%	1/16W
R5584	1-218-977-11	METAL CHIP	100K	5%	1/16W
R5585	1-218-977-11	METAL CHIP	100K	5%	1/16W
R5586	1-218-990-81	SHORT CHIP	0		
R5587	1-218-990-81	SHORT CHIP	0		
R5588	1-218-941-11	METAL CHIP	100	5%	1/16W
R5589	1-208-691-11	METAL CHIP	2.2K	0.5%	1/16W
R5590	1-208-683-11	METAL CHIP	1K	0.5%	1/16W
R5591	1-218-965-11	METAL CHIP	10K	5%	1/16W
R5592	1-218-965-11	METAL CHIP	10K	5%	1/16W
R5593	1-218-965-11	METAL CHIP	10K	5%	1/16W
R5594	1-218-965-11	METAL CHIP	10K	5%	1/16W
R5596	1-218-977-11	METAL CHIP	100K	5%	1/16W
R5597	1-218-977-11	METAL CHIP	100K	5%	1/16W
R5598	1-218-977-11	METAL CHIP	100K	5%	1/16W
R5599	1-218-977-11	METAL CHIP	100K	5%	1/16W
R5600	1-218-977-11	METAL CHIP	100K	5%	1/16W
R5601	1-218-977-11	METAL CHIP	100K	5%	1/16W
R5602	1-218-977-11	METAL CHIP	100K	5%	1/16W
		< SWITCH >			
S5501	1-786-723-11	SWITCH, TACTILE			
S5502	1-786-723-11	SWITCH, TACTILE			
		< VARISTOR >			
* VDR551	1-802-279-11	VARISTOR (SMD)			

Ref. No.	Part No.	Description			
	A-1752-128-A	PD-395 BOARD, COMPLETE			
		**********			
		< CAPACITOR >			
C2001	1-100-581-81	CERAMIC CHIP	0.0047uF	10%	50V
C2002	1-100-581-81	CERAMIC CHIP	0.0047uF	10%	50V
C2003	1-119-750-11	TANTAL. CHIP	22uF	20%	6.3V
C2004	1-125-777-11	CERAMIC CHIP	0.1uF	10%	10V
C2005	1-165-875-11	CERAMIC CHIP	10uF	10%	10V
C2006	1-112-300-91	CERAMIC CHIP	4.7uF	10%	10V
* C2008	1-112-746-11	CERAMIC CHIP	4.7uF	10%	6.3V
C2009	1-125-777-11	CERAMIC CHIP	0.1uF	10%	10V
C2010	1-112-300-91	CERAMIC CHIP	4.7uF	10%	10V
C2011	1-165-884-11	CERAMIC CHIP	2.2uF	10%	6.3V
C2012	1-127-861-11	CERAMIC CHIP	2.2uF	10%	16V
C2013	1-165-884-11	CERAMIC CHIP	2.2uF	10%	6.3V
C2014	1-112-300-91	CERAMIC CHIP	4.7uF	10%	10V
C2015	1-112-300-91	CERAMIC CHIP	4.7uF	10%	10V
C2016	1-165-908-11	CERAMIC CHIP	1uF	10%	10V
C2017	1-165-908-11	CERAMIC CHIP	1uF	10%	10V
C2018	1-125-889-11	CERAMIC CHIP	2.2uF	10%	10V
C2019	1-165-884-11	CERAMIC CHIP	2.2uF	10%	6.3V
C2020	1-165-884-11	CERAMIC CHIP	2.2uF	10%	6.3V
C2021	1-165-884-11	CERAMIC CHIP	2.2uF	10%	6.3V
C2022	1-165-884-11	CERAMIC CHIP	2.2uF	10%	6.3V
C2023	1-165-884-11	CERAMIC CHIP	2.2uF	10%	6.3V
C2024	1-127-861-11	CERAMIC CHIP	2.2uF	10%	16V
		< CONNECTOR >			
* CN2001	1-821-760-21	CONNECTOR, COAXIAL (RECEPTACLE)			
* CN2002	1-794-322-51	FFC/CONNECTOR, FPC (ZIF) 6P			
* CN2003	1-794-322-51	FFC/CONNECTOR, FPC (ZIF) 6P			
* CN2004	1-818-818-81	CONNECTOR, FPC (ZIF) 29P			
* CN2005	1-817-942-81	CONNECTOR, FPC (ZIF) 39P			
		< DIODE >			
D2002	8-719-069-29	DIODE RB520S-30FJTE61			
D2003	8-719-069-29	DIODE RB520S-30FJTE61			
		< FERRITE BEAD >			
FB2001	1-469-581-21	INDUCTOR, FERRITE BEAD (1005)			
		< IC >			
* IC2001	6-712-051-01	IC SN65LVDS302ZQER			
		< COIL >			
* L2001	1-481-425-21	INDUCTOR 10uH			
* L2002	1-481-425-21	INDUCTOR 10uH			
* L2003	1-481-425-21	INDUCTOR 10uH			
		< TRANSISTOR >			
Q2001	8-729-427-37	TRANSISTOR XP411F-TXE			
Q2002	8-729-427-67	TRANSISTOR XP421F-TXE			

Ref. No.	Part No.	Description			
		< RESISTOR >			
R2004	1-218-973-11	METAL CHIP	47K	5%	1/16W
R2006	1-218-940-11	METAL CHIP	82	5%	1/16W
R2007	1-218-973-11	METAL CHIP	47K	5%	1/16W
R2008	1-218-973-11	METAL CHIP	47K	5%	1/16W
R2009	1-218-973-11	METAL CHIP	47K	5%	1/16W
R2012	1-218-973-11	METAL CHIP	47K	5%	1/16W
R2014	1-218-973-11	METAL CHIP	47K	5%	1/16W
R2015	1-216-833-11	METAL CHIP	10K	5%	1/10W
R2018	1-216-833-11	METAL CHIP	10K	5%	1/10W
R2022	1-218-990-81	SHORT CHIP	0		

	A-1752-129-A	PI-030 BOARD, COMPLETE
		**********
		< CAPACITOR >
C2502	1-131-861-91	TANTAL. CHIP 4.7uF 20% 20V
C2504	1-165-908-11	CERAMIC CHIP 1uF 10% 10V
C2505	1-137-910-11	TANTAL. CHIP 10uF 20% 16V
C2506	1-165-908-11	CERAMIC CHIP 1uF 10% 10V
C2509	1-164-245-11	CERAMIC CHIP 0.015uF 10% 25V
C2511	1-127-715-11	CERAMIC CHIP 0.22uF 10% 16V
C2512	1-127-715-11	CERAMIC CHIP 0.22uF 10% 16V
C2513	1-125-891-11	CERAMIC CHIP 0.47uF 10% 10V
C2514	1-125-891-11	CERAMIC CHIP 0.47uF 10% 10V
C2515	1-100-567-81	CERAMIC CHIP 0.01uF 10% 25V
C2517	1-127-820-11	CERAMIC CHIP 4.7uF 10% 16V
		< CONNECTOR >
* CN2501	1-821-760-21	CONNECTOR, COAXIAL (RECEPTACLE)
* CN2502	1-816-643-51	FFC/FPC CONNECTOR (LIF) 10P
CN2503	1-778-506-21	PIN, CONNECTOR (PC BOARD) 2P
CN2504	1-817-920-11	CONNECTOR, FPC (ZIF) 80P
CN2505	1-794-375-21	PIN, CONNECTOR 2P
* CN2507	1-816-650-51	FFC/CONNECTOR, FPC (LIF) 24P
CN2508	1-816-655-61	CONNECTOR, FFC/FPC 8P
* CN2509	1-817-697-51	CONNECTOR, FPC (ZIF) 19P
CN2510	1-691-346-61	CONNECTOR, FFC/FPC (ZIF) 8P
		< IC >
IC2501	6-703-228-01	IC TK11160CSCL-G
IC2502	8-759-581-11	IC NJM2125F (TE2)
IC2503	8-759-581-11	IC NJM2125F (TE2)
IC2505	8-759-581-11	IC NJM2125F (TE2)
IC2508	8-759-564-49	IC TC7W53FU (TE12R)
IC2509	6-707-702-01	IC NJM2746RB1 (TE2)
IC2510	6-707-702-01	IC NJM2746RB1 (TE2)
		< TRANSISTOR >
* Q2501	6-551-624-01	TRANSISTOR RN2102MFV (TL3SONY)
* Q2502	6-551-624-01	TRANSISTOR RN2102MFV (TL3SONY)
Q2503	6-551-631-01	TRANSISTOR RN1104MFV (TL3SONY)
Q2504	6-551-631-01	TRANSISTOR RN1104MFV (TL3SONY)
Q2505	6-551-631-01	TRANSISTOR RN1104MFV (TL3SONY)
Q2507	8-729-044-37	TRANSISTOR LSK3019FP8TL

Ref. No.	Part No.	Description			
		< RESISTOR >			
R2502	1-217-806-11	METAL CHIP	1	5%	1/8W
R2503	1-208-911-11	METAL CHIP	10K	0.5%	1/16W
R2504	1-208-911-11	METAL CHIP	10K	0.5%	1/16W
R2505	1-208-911-11	METAL CHIP	10K	0.5%	1/16W
R2506	1-208-911-11	METAL CHIP	10K	0.5%	1/16W
R2509	1-208-911-11	METAL CHIP	10K	0.5%	1/16W
R2510	1-208-911-11	METAL CHIP	10K	0.5%	1/16W
R2513	1-208-713-11	METAL CHIP	18K	0.5%	1/16W
R2514	1-208-889-11	METAL CHIP	1.2K	0.5%	1/16W
R2515	1-218-975-11	METAL CHIP	68K	5%	1/16W
R2516	1-218-973-11	METAL CHIP	47K	5%	1/16W
R2517	1-218-973-11	METAL CHIP	47K	5%	1/16W
R2519	1-208-911-11	METAL CHIP	10K	0.5%	1/16W
R2520	1-208-911-11	METAL CHIP	10K	0.5%	1/16W
R2521	1-208-911-11	METAL CHIP	10K	0.5%	1/16W
R2523	1-208-922-11	METAL CHIP	30K	0.5%	1/16W
R2524	1-208-911-11	METAL CHIP	10K	0.5%	1/16W
R2525	1-218-975-11	METAL CHIP	68K	5%	1/16W
R2526	1-208-922-11	METAL CHIP	30K	0.5%	1/16W
R2531	1-218-941-81	METAL CHIP	100	5%	1/16W
R2532	1-218-941-81	METAL CHIP	100	5%	1/16W
R2533	1-208-911-11	METAL CHIP	10K	0.5%	1/16W
R2534	1-208-911-11	METAL CHIP	10K	0.5%	1/16W
R2535	1-208-911-11	METAL CHIP	10K	0.5%	1/16W
R2536	1-208-911-11	METAL CHIP	10K	0.5%	1/16W

	A-1752-121-A	TC-001 BOARD, COMPLETE **********			
		< CAPACITOR >			
C6503	1-125-777-11	CERAMIC CHIP	0.1uF	10%	10V
C6506	1-125-777-11	CERAMIC CHIP	0.1uF	10%	10V
C6510	1-125-777-11	CERAMIC CHIP	0.1uF	10%	10V
C6511	1-100-611-91	CERAMIC CHIP	22uF	20%	6.3V
C6514	1-165-989-11	CERAMIC CHIP	10uF	10%	6.3V
C6519	1-165-989-11	CERAMIC CHIP	10uF	10%	6.3V
		< CONNECTOR >			
CN6501	1-816-655-61	CONNECTOR, FFC/FPC 8P			
CN6502	1-793-446-11	JACK, PIN 1P			
CN6503	1-816-654-61	FFC/FPC CONNECTOR (LIF) 6P			
		< DIODE >			
D6501	8-719-069-29	DIODE RB520S-30FJTE61			
D6502	8-719-069-29	DIODE RB520S-30FJTE61			
		< IC >			
IC6501	6-710-786-01	IC TC7SH125FU (T5RSOYF)			
IC6504	8-759-494-88	IC TC75S56F (TE85R)			
IC6506	8-759-678-15	IC TLV2231CDBVR			
		< RESISTOR >			
R6512	1-218-954-11	METAL CHIP	1.2K	5%	1/16W
R6514	1-218-989-11	METAL CHIP	1M	5%	1/16W
R6516	1-208-911-11	METAL CHIP	10K	0.5%	1/16W
R6517	1-218-953-11	METAL CHIP	1K	5%	1/16W
R6519	1-208-715-11	METAL CHIP	22K	0.5%	1/16W
R6520	1-218-969-11	METAL CHIP	22K	5%	1/16W
R6523	1-208-715-11	METAL CHIP	22K	0.5%	1/16W
R6524	1-208-911-11	METAL CHIP	10K	0.5%	1/16W
R6525	1-208-715-11	METAL CHIP	22K	0.5%	1/16W
R6526	1-208-911-11	METAL CHIP	10K	0.5%	1/16W
R6529	1-218-963-11	METAL CHIP	6.8K	5%	1/16W
R6534	1-218-929-11	METAL CHIP	10	5%	1/16W
R6536	1-218-963-11	METAL CHIP	6.8K	5%	1/16W
R6540	1-218-963-11	METAL CHIP	6.8K	5%	1/16W

	A-1752-126-A	TS-157 BOARD, COMPLETE **********			
		< CONNECTOR >			
CN9001	1-816-654-61	FFC/FPC CONNECTOR (LIF) 6P			
		< SWITCH >			
S9001	1-786-043-21	SWITCH, SLIDE			

	A-1758-578-A	VC-582 BOARD, COMPLETE (SERVICE) **********			

(CN4402, IC2001 and IC2601 are not supplied, but they are included in VC-582 complete board (service).)

		< CAPACITOR >			
C1007	1-112-717-91	CERAMIC CHIP	1uF	10%	6.3V
C1009	1-127-715-11	CERAMIC CHIP	0.22uF	10%	16V
C1010	1-165-908-11	CERAMIC CHIP	1uF	10%	10V
C1011	1-100-567-81	CERAMIC CHIP	0.01uF	10%	25V
C1012	1-100-567-81	CERAMIC CHIP	0.01uF	10%	25V
C1013	1-125-777-11	CERAMIC CHIP	0.1uF	10%	10V
C1214	1-112-717-91	CERAMIC CHIP	1uF	10%	6.3V
C1215	1-112-717-91	CERAMIC CHIP	1uF	10%	6.3V
C1216	1-112-717-91	CERAMIC CHIP	1uF	10%	6.3V
C1217	1-112-717-91	CERAMIC CHIP	1uF	10%	6.3V
C1218	1-125-777-11	CERAMIC CHIP	0.1uF	10%	10V
C1219	1-125-777-11	CERAMIC CHIP	0.1uF	10%	10V
C1220	1-125-777-11	CERAMIC CHIP	0.1uF	10%	10V
C1221	1-125-777-11	CERAMIC CHIP	0.1uF	10%	10V
C1222	1-112-717-91	CERAMIC CHIP	1uF	10%	6.3V
C1223	1-112-717-91	CERAMIC CHIP	1uF	10%	6.3V
C1224	1-125-777-11	CERAMIC CHIP	0.1uF	10%	10V
C1225	1-125-777-11	CERAMIC CHIP	0.1uF	10%	10V
C1401	1-125-777-11	CERAMIC CHIP	0.1uF	10%	10V
C1402	1-125-777-11	CERAMIC CHIP	0.1uF	10%	10V
C1403	1-125-777-11	CERAMIC CHIP	0.1uF	10%	10V
C1404	1-125-777-11	CERAMIC CHIP	0.1uF	10%	10V
C1405	1-125-777-11	CERAMIC CHIP	0.1uF	10%	10V
C1406	1-125-777-11	CERAMIC CHIP	0.1uF	10%	10V
C1407	1-125-777-11	CERAMIC CHIP	0.1uF	10%	10V
C1408	1-125-777-11	CERAMIC CHIP	0.1uF	10%	10V
C1409	1-125-777-11	CERAMIC CHIP	0.1uF	10%	10V
C1410	1-125-777-11	CERAMIC CHIP	0.1uF	10%	10V
C1411	1-125-777-11	CERAMIC CHIP	0.1uF	10%	10V
C1412	1-125-777-11	CERAMIC CHIP	0.1uF	10%	10V
C1413	1-125-777-11	CERAMIC CHIP	0.1uF	10%	10V
C1414	1-125-777-11	CERAMIC CHIP	0.1uF	10%	10V
C1415	1-125-777-11	CERAMIC CHIP	0.1uF	10%	10V
C1416	1-125-777-11	CERAMIC CHIP	0.1uF	10%	10V
C1417	1-119-750-11	TANTAL. CHIP	22uF	20%	6.3V
C1418	1-119-750-11	TANTAL. CHIP	22uF	20%	6.3V
C1419	1-119-750-11	TANTAL. CHIP	22uF	20%	6.3V
C1420	1-125-777-11	CERAMIC CHIP	0.1uF	10%	10V
C1421	1-119-750-11	TANTAL. CHIP	22uF	20%	6.3V
C1422	1-119-750-11	TANTAL. CHIP	22uF	20%	6.3V
C1423	1-119-750-11	TANTAL. CHIP	22uF	20%	6.3V
C1424	1-119-750-11	TANTAL. CHIP	22uF	20%	6.3V
C1431	1-165-908-11	CERAMIC CHIP	1uF	10%	10V
C1432	1-165-908-11	CERAMIC CHIP	1uF	10%	10V
C1440	1-125-777-11	CERAMIC CHIP	0.1uF	10%	10V
C1441	1-117-919-11	TANTAL. CHIP	10uF	20%	6.3V
C1443	1-125-777-11	CERAMIC CHIP	0.1uF	10%	10V
C1444	1-125-777-11	CERAMIC CHIP	0.1uF	10%	10V
C1445	1-125-777-11	CERAMIC CHIP	0.1uF	10%	10V
C1446	1-117-919-11	TANTAL. CHIP	10uF	20%	6.3V
C1447	1-164-854-11	CERAMIC CHIP	15PF	5%	50V
C1448	1-125-777-11	CERAMIC CHIP	0.1uF	10%	10V
C1449	1-125-777-11	CERAMIC CHIP	0.1uF	10%	10V
C1601	1-125-777-11	CERAMIC CHIP	0.1uF	10%	10V
C1602	1-125-777-11	CERAMIC CHIP	0.1uF	10%	10V
C1603	1-125-777-11	CERAMIC CHIP	0.1uF	10%	10V
C1604	1-125-777-11	CERAMIC CHIP	0.1uF	10%	10V
C1605	1-119-750-11	TANTAL. CHIP	22uF	20%	6.3V
C1606	1-125-777-11	CERAMIC CHIP	0.1uF	10%	10V
C2001	1-125-777-11	CERAMIC CHIP	0.1uF	10%	10V
C2003	1-125-777-11	CERAMIC CHIP	0.1uF	10%	10V
C2004	1-100-611-91	CERAMIC CHIP	22uF	20%	6.3V
C2005	1-100-611-91	CERAMIC CHIP	22uF	20%	6.3V
C2007	1-125-777-11	CERAMIC CHIP	0.1uF	10%	10V
C2008	1-125-777-11	CERAMIC CHIP	0.1uF	10%	10V
C2012	1-125-777-11	CERAMIC CHIP	0.1uF	10%	10V
C2013	1-125-777-11	CERAMIC CHIP	0.1uF	10%	10V
C2014	1-125-777-11	CERAMIC CHIP	0.1uF	10%	10V
C2015	1-125-777-11	CERAMIC CHIP	0.1uF	10%	10V
C2016	1-125-777-11	CERAMIC CHIP	0.1uF	10%	10V
C2017	1-125-777-11	CERAMIC CHIP	0.1uF	10%	10V
C2018	1-125-777-11	CERAMIC CHIP	0.1uF	10%	10V
C2019	1-125-777-11	CERAMIC CHIP	0.1uF	10%	10V
C2020	1-125-777-11	CERAMIC CHIP	0.1uF	10%	10V
C2021	1-165-884-11	CERAMIC CHIP	2.2uF	10%	6.3V
C2022	1-165-884-11	CERAMIC CHIP	2.2uF	10%	6.3V
C2023	1-165-884-11	CERAMIC CHIP	2.2uF	10%	6.3V
C2024	1-165-908-11	CERAMIC CHIP	1uF	10%	10V
C2025	1-125-777-11	CERAMIC CHIP	0.1uF	10%	10V
C2026	1-125-777-11	CERAMIC CHIP	0.1uF	10%	10V
C2028	1-125-777-11	CERAMIC CHIP	0.1uF	10%	10V
C2029	1-125-777-11	CERAMIC CHIP	0.1uF	10%	10V
C2030	1-125-777-11	CERAMIC CHIP	0.1uF	10%	10V
C2032	1-165-908-11	CERAMIC CHIP	1uF	10%	10V
C2033	1-125-777-11	CERAMIC CHIP	0.1uF	10%	10V
C2034	1-165-908-11	CERAMIC CHIP	1uF	10%	10V
C2201	1-100-611-91	CERAMIC CHIP	22uF	20%	6.3V
C2202	1-125-777-11	CERAMIC CHIP	0.1uF	10%	10V
C2203	1-125-777-11	CERAMIC CHIP	0.1uF	10%	10V
C2204	1-100-611-91	CERAMIC CHIP	22uF	20%	6.3V
C2205	1-125-777-11	CERAMIC CHIP	0.1uF	10%	10V
C2206	1-125-777-11	CERAMIC CHIP	0.1uF	10%	10V
C2207	1-125-777-11	CERAMIC CHIP	0.1uF	10%	10V
C2208	1-125-777-11	CERAMIC CHIP	0.1uF	10%	10V
C2209	1-100-611-91	CERAMIC CHIP	22uF	20%	6.3V
C2301	1-125-777-11	CERAMIC CHIP	0.1uF	10%	10V
C2304	1-125-777-11	CERAMIC CHIP	0.1uF	10%	10V
C2305	1-100-567-81	CERAMIC CHIP	0.01uF	10%	25V
C2306	1-125-777-11	CERAMIC CHIP	0.1uF	10%	10V
C2307	1-125-777-11	CERAMIC CHIP	0.1uF	10%	10V
* C2308	1-112-746-11	CERAMIC CHIP	4.7uF	10%	6.3V
C2309	1-125-777-11	CERAMIC CHIP	0.1uF	10%	10V
C2310	1-125-777-11	CERAMIC CHIP	0.1uF	10%	10V
C2311	1-125-777-11	CERAMIC CHIP	0.1uF	10%	10V
C2312	1-125-777-11	CERAMIC CHIP	0.1uF	10%	10V
C2313	1-125-777-11	CERAMIC CHIP	0.1uF	10%	10V
C2314	1-125-777-11	CERAMIC CHIP	0.1uF	10%	10V
* C2315	1-112-746-11	CERAMIC CHIP	4.7uF	10%	6.3V
* C2316	1-112-746-11	CERAMIC CHIP	4.7uF	10%	6.3V
C2317	1-125-777-11	CERAMIC CHIP	0.1uF	10%	10V
C2318	1-125-777-11	CERAMIC CHIP	0.1uF	10%	10V
* C2319	1-112-746-11	CERAMIC CHIP	4.7uF	10%	6.3V
C2504	1-125-777-11	CERAMIC CHIP	0.1uF	10%	10V
C2507	1-125-777-11	CERAMIC CHIP	0.1uF	10%	10V
C2508	1-125-777-11	CERAMIC CHIP	0.1uF	10%	10V
C2509	1-100-539-91	TANTAL. CHIP	47uF	20%	6.3V
C2510	1-165-989-11	CERAMIC CHIP	10uF	10%	6.3V
C2511	1-165-989-11	CERAMIC CHIP	10uF	10%	6.3V
C2512	1-125-777-11	CERAMIC CHIP	0.1uF	10%	10V
C2513	1-125-777-11	CERAMIC CHIP	0.1uF	10%	10V
C2514	1-125-777-11	CERAMIC CHIP	0.1uF	10%	10V
C2515	1-125-777-11	CERAMIC CHIP	0.1uF	10%	10V
C2516	1-125-777-11	CERAMIC CHIP	0.1uF	10%	10V
C2517	1-125-777-11	CERAMIC CHIP	0.1uF	10%	10V
C2518	1-125-777-11	CERAMIC CHIP	0.1uF	10%	10V
C2519	1-125-777-11	CERAMIC CHIP	0.1uF	10%	10V
C2520	1-125-777-11	CERAMIC CHIP	0.1uF	10%	10V
* C2521	1-112-746-11	CERAMIC CHIP	4.7uF	10%	6.3V
* C2522	1-112-746-11	CERAMIC CHIP	4.7uF	10%	6.3V
C2603	1-125-777-11	CERAMIC CHIP	0.1uF	10%	10V
C2604	1-125-777-11	CERAMIC CHIP	0.1uF	10%	10V
C2605	1-125-777-11	CERAMIC CHIP	0.1uF	10%	10V
C2606	1-125-777-11	CERAMIC CHIP	0.1uF	10%	10V
C2607	1-127-760-11	CERAMIC CHIP	4.7uF	10%	6.3V
C2608	1-125-777-11	CERAMIC CHIP	0.1uF	10%	10V
C2609	1-100-539-91	TANTAL. CHIP	47uF	20%	6.3V
C2610	1-127-760-11	CERAMIC CHIP	4.7uF	10%	6.3V
C2611	1-125-777-11	CERAMIC CHIP	0.1uF	10%	10V
C2612	1-125-777-11	CERAMIC CHIP	0.1uF	10%	10V
C2805	1-125-777-11	CERAMIC CHIP	0.1uF	10%	10V
C2809	1-100-539-91	TANTAL. CHIP	47uF	20%	6.3V
C2810	1-100-539-91	TANTAL. CHIP	47uF	20%	6.3V
C2811	1-119-750-11	TANTAL. CHIP	22uF	20%	6.3V
C2814	1-100-567-81	CERAMIC CHIP	0.01uF	10%	25V
C2816	1-165-908-11	CERAMIC CHIP	1uF	10%	10V
C2817	1-127-760-11	CERAMIC CHIP	4.7uF	10%	6.3V
C2822	1-125-777-11	CERAMIC CHIP	0.1uF	10%	10V

Ref. No.	Part No.	Description			
C2826	1-125-777-11	CERAMIC CHIP	0.1uF	10%	10V
C2827	1-125-777-11	CERAMIC CHIP	0.1uF	10%	10V
C2840	1-125-777-11	CERAMIC CHIP	0.1uF	10%	10V
C2841	1-165-908-11	CERAMIC CHIP	1uF	10%	10V
C2842	1-165-884-11	CERAMIC CHIP	2.2uF	10%	6.3V
C2843	1-165-884-11	CERAMIC CHIP	2.2uF	10%	6.3V
C2844	1-165-884-11	CERAMIC CHIP	2.2uF	10%	6.3V
C2845	1-119-750-11	TANTAL. CHIP	22uF	20%	6.3V
C2846	1-165-908-11	CERAMIC CHIP	1uF	10%	10V
C2847	1-165-908-11	CERAMIC CHIP	1uF	10%	10V
C2848	1-165-908-11	CERAMIC CHIP	1uF	10%	10V
C2849	1-165-908-11	CERAMIC CHIP	1uF	10%	10V
C2853	1-112-300-91	CERAMIC CHIP	4.7uF	10%	10V
C2854	1-112-300-91	CERAMIC CHIP	4.7uF	10%	10V
C2855	1-125-777-11	CERAMIC CHIP	0.1uF	10%	10V
C2856	1-125-777-11	CERAMIC CHIP	0.1uF	10%	10V
C2858	1-165-989-11	CERAMIC CHIP	10uF	10%	6.3V
C2859	1-165-989-11	CERAMIC CHIP	10uF	10%	6.3V
C2861	1-125-777-11	CERAMIC CHIP	0.1uF	10%	10V
C3002	1-100-539-91	TANTAL. CHIP	47uF	20%	6.3V
C3003	1-100-539-91	TANTAL. CHIP	47uF	20%	6.3V
C3005	1-125-777-11	CERAMIC CHIP	0.1uF	10%	10V
C3008	1-125-777-11	CERAMIC CHIP	0.1uF	10%	10V
C3009	1-125-777-11	CERAMIC CHIP	0.1uF	10%	10V
C3010	1-125-777-11	CERAMIC CHIP	0.1uF	10%	10V
C3011	1-125-777-11	CERAMIC CHIP	0.1uF	10%	10V
C3012	1-125-777-11	CERAMIC CHIP	0.1uF	10%	10V
C3013	1-165-908-11	CERAMIC CHIP	1uF	10%	10V
C3014	1-125-777-11	CERAMIC CHIP	0.1uF	10%	10V
C3015	1-165-908-11	CERAMIC CHIP	1uF	10%	10V
C3016	1-165-908-11	CERAMIC CHIP	1uF	10%	10V
C3017	1-165-908-11	CERAMIC CHIP	1uF	10%	10V
C3018	1-164-850-11	CERAMIC CHIP	10PF	0.5PF	50V
C3019	1-164-850-11	CERAMIC CHIP	10PF	0.5PF	50V
C3020	1-164-850-11	CERAMIC CHIP	10PF	0.5PF	50V
C3021	1-164-850-11	CERAMIC CHIP	10PF	0.5PF	50V
C3023	1-125-777-11	CERAMIC CHIP	0.1uF	10%	10V
C3024	1-165-908-11	CERAMIC CHIP	1uF	10%	10V
C3025	1-165-989-11	CERAMIC CHIP	10uF	10%	6.3V
C3026	1-125-777-11	CERAMIC CHIP	0.1uF	10%	10V
C3027	1-125-777-11	CERAMIC CHIP	0.1uF	10%	10V
C3028	1-125-777-11	CERAMIC CHIP	0.1uF	10%	10V
C3029	1-125-777-11	CERAMIC CHIP	0.1uF	10%	10V
C3030	1-165-908-11	CERAMIC CHIP	1uF	10%	10V
C3031	1-165-908-11	CERAMIC CHIP	1uF	10%	10V
C3032	1-165-908-11	CERAMIC CHIP	1uF	10%	10V
C3033	1-125-777-11	CERAMIC CHIP	0.1uF	10%	10V
C3034	1-165-908-11	CERAMIC CHIP	1uF	10%	10V
C3035	1-125-777-11	CERAMIC CHIP	0.1uF	10%	10V
C3036	1-125-777-11	CERAMIC CHIP	0.1uF	10%	10V
C3037	1-125-777-11	CERAMIC CHIP	0.1uF	10%	10V
C3038	1-125-777-11	CERAMIC CHIP	0.1uF	10%	10V
C3039	1-125-777-11	CERAMIC CHIP	0.1uF	10%	10V
C3040	1-125-777-11	CERAMIC CHIP	0.1uF	10%	10V
C3041	1-165-908-11	CERAMIC CHIP	1uF	10%	10V
C3042	1-165-989-11	CERAMIC CHIP	10uF	10%	6.3V
C3043	1-125-777-11	CERAMIC CHIP	0.1uF	10%	10V
C3044	1-125-777-11	CERAMIC CHIP	0.1uF	10%	10V

Ref. No.	Part No.	Description			
C3045	1-125-777-11	CERAMIC CHIP	0.1uF	10%	10V
C3046	1-125-777-11	CERAMIC CHIP	0.1uF	10%	10V
C3047	1-125-777-11	CERAMIC CHIP	0.1uF	10%	10V
C3202	1-125-777-11	CERAMIC CHIP	0.1uF	10%	10V
C3203	1-125-777-11	CERAMIC CHIP	0.1uF	10%	10V
C3204	1-125-777-11	CERAMIC CHIP	0.1uF	10%	10V
C3205	1-125-777-11	CERAMIC CHIP	0.1uF	10%	10V
C3301	1-165-908-11	CERAMIC CHIP	1uF	10%	10V
C3302	1-165-908-11	CERAMIC CHIP	1uF	10%	10V
C3303	1-165-908-11	CERAMIC CHIP	1uF	10%	10V
C3304	1-165-908-11	CERAMIC CHIP	1uF	10%	10V
C3306	1-165-908-11	CERAMIC CHIP	1uF	10%	10V
C3307	1-165-908-11	CERAMIC CHIP	1uF	10%	10V
C3308	1-165-908-11	CERAMIC CHIP	1uF	10%	10V
C3309	1-165-908-11	CERAMIC CHIP	1uF	10%	10V
C3311	1-165-908-11	CERAMIC CHIP	1uF	10%	10V
C3313	1-165-908-11	CERAMIC CHIP	1uF	10%	10V
C3401	1-165-989-11	CERAMIC CHIP	10uF	10%	6.3V
C3402	1-165-884-11	CERAMIC CHIP	2.2uF	10%	6.3V
C3403	1-165-884-11	CERAMIC CHIP	2.2uF	10%	6.3V
C3404	1-165-884-11	CERAMIC CHIP	2.2uF	10%	6.3V
C3405	1-165-884-11	CERAMIC CHIP	2.2uF	10%	6.3V
C3407	1-125-777-11	CERAMIC CHIP	0.1uF	10%	10V
C3408	1-125-777-11	CERAMIC CHIP	0.1uF	10%	10V
C3409	1-125-777-11	CERAMIC CHIP	0.1uF	10%	10V
C3410	1-125-777-11	CERAMIC CHIP	0.1uF	10%	10V
C3411	1-119-750-11	TANTAL. CHIP	22uF	20%	6.3V
C3412	1-119-750-11	TANTAL. CHIP	22uF	20%	6.3V
C3413	1-125-777-11	CERAMIC CHIP	0.1uF	10%	10V
C3414	1-125-777-11	CERAMIC CHIP	0.1uF	10%	10V
C3417	1-125-777-11	CERAMIC CHIP	0.1uF	10%	10V
C3418	1-125-777-11	CERAMIC CHIP	0.1uF	10%	10V
C3419	1-125-777-11	CERAMIC CHIP	0.1uF	10%	10V
C3420	1-125-777-11	CERAMIC CHIP	0.1uF	10%	10V
C3421	1-125-777-11	CERAMIC CHIP	0.1uF	10%	10V
C3422	1-125-777-11	CERAMIC CHIP	0.1uF	10%	10V
C3423	1-125-777-11	CERAMIC CHIP	0.1uF	10%	10V
C3424	1-125-777-11	CERAMIC CHIP	0.1uF	10%	10V
C3425	1-125-777-11	CERAMIC CHIP	0.1uF	10%	10V
C3601	1-165-989-11	CERAMIC CHIP	10uF	10%	6.3V
C3602	1-125-777-11	CERAMIC CHIP	0.1uF	10%	10V
C3603	1-125-777-11	CERAMIC CHIP	0.1uF	10%	10V
C3604	1-125-777-11	CERAMIC CHIP	0.1uF	10%	10V
C3605	1-125-777-11	CERAMIC CHIP	0.1uF	10%	10V
C3701	1-100-611-91	CERAMIC CHIP	22uF	20%	6.3V
C3702	1-125-777-11	CERAMIC CHIP	0.1uF	10%	10V
C4001	1-100-567-81	CERAMIC CHIP	0.01uF	10%	25V
C4002	1-112-717-91	CERAMIC CHIP	1uF	10%	6.3V
C4003	1-165-989-11	CERAMIC CHIP	10uF	10%	6.3V
C4004	1-125-777-11	CERAMIC CHIP	0.1uF	10%	10V
C4005	1-165-989-11	CERAMIC CHIP	10uF	10%	6.3V
C4006	1-125-777-11	CERAMIC CHIP	0.1uF	10%	10V
C4007	1-165-908-11	CERAMIC CHIP	1uF	10%	10V
C4010	1-125-777-11	CERAMIC CHIP	0.1uF	10%	10V
C4011	1-165-989-11	CERAMIC CHIP	10uF	10%	6.3V
C4013	1-165-908-11	CERAMIC CHIP	1uF	10%	10V
C4015	1-165-908-11	CERAMIC CHIP	1uF	10%	10V
C4016	1-165-908-11	CERAMIC CHIP	1uF	10%	10V
C4017	1-100-567-81	CERAMIC CHIP	0.01uF	10%	25V

Ref. No.	Part No.	Description			
C4018	1-112-717-91	CERAMIC CHIP	1uF	10%	6.3V
C4019	1-165-989-11	CERAMIC CHIP	10uF	10%	6.3V
C4020	1-165-989-11	CERAMIC CHIP	10uF	10%	6.3V
C4021	1-100-567-81	CERAMIC CHIP	0.01uF	10%	25V
C4022	1-125-777-11	CERAMIC CHIP	0.1uF	10%	10V
C4023	1-112-717-91	CERAMIC CHIP	1uF	10%	6.3V
C4024	1-165-989-11	CERAMIC CHIP	10uF	10%	6.3V
C4025	1-165-989-11	CERAMIC CHIP	10uF	10%	6.3V
C4026	1-125-777-11	CERAMIC CHIP	0.1uF	10%	10V
C4027	1-165-908-11	CERAMIC CHIP	1uF	10%	10V
C4028	1-165-908-11	CERAMIC CHIP	1uF	10%	10V
C4030	1-165-908-11	CERAMIC CHIP	1uF	10%	10V
C4032	1-125-777-11	CERAMIC CHIP	0.1uF	10%	10V
C4033	1-165-989-11	CERAMIC CHIP	10uF	10%	6.3V
C4036	1-165-908-11	CERAMIC CHIP	1uF	10%	10V
C4037	1-165-989-11	CERAMIC CHIP	10uF	10%	6.3V
C4038	1-125-777-11	CERAMIC CHIP	0.1uF	10%	10V
C4039	1-165-989-11	CERAMIC CHIP	10uF	10%	6.3V
C4040	1-125-777-11	CERAMIC CHIP	0.1uF	10%	10V
C4041	1-112-717-91	CERAMIC CHIP	1uF	10%	6.3V
C4042	1-100-567-81	CERAMIC CHIP	0.01uF	10%	25V
C4043	1-125-777-11	CERAMIC CHIP	0.1uF	10%	10V
C4044	1-164-850-11	CERAMIC CHIP	10PF	0.5PF	50V
C4045	1-164-850-11	CERAMIC CHIP	10PF	0.5PF	50V
C4046	1-164-850-11	CERAMIC CHIP	10PF	0.5PF	50V
C4047	1-164-850-11	CERAMIC CHIP	10PF	0.5PF	50V
C4048	1-125-777-11	CERAMIC CHIP	0.1uF	10%	10V
C4050	1-125-777-11	CERAMIC CHIP	0.1uF	10%	10V
C4051	1-125-777-11	CERAMIC CHIP	0.1uF	10%	10V
C4054	1-125-777-11	CERAMIC CHIP	0.1uF	10%	10V
C4055	1-125-777-11	CERAMIC CHIP	0.1uF	10%	10V
C4056	1-100-567-81	CERAMIC CHIP	0.01uF	10%	25V
C4404	1-165-989-11	CERAMIC CHIP	10uF	10%	6.3V
C4405	1-165-989-11	CERAMIC CHIP	10uF	10%	6.3V
C4406	1-165-989-11	CERAMIC CHIP	10uF	10%	6.3V
C4407	1-165-989-11	CERAMIC CHIP	10uF	10%	6.3V
C4408	1-100-539-91	TANTAL. CHIP	47uF	20%	6.3V
C4409	1-100-539-91	TANTAL. CHIP	47uF	20%	6.3V
C4410	1-125-777-11	CERAMIC CHIP	0.1uF	10%	10V
C4411	1-125-777-11	CERAMIC CHIP	0.1uF	10%	10V
C4414	1-165-989-11	CERAMIC CHIP	10uF	10%	6.3V
C4415	1-112-717-91	CERAMIC CHIP	1uF	10%	6.3V
C4416	1-165-989-11	CERAMIC CHIP	10uF	10%	6.3V
C4418	1-112-717-91	CERAMIC CHIP	1uF	10%	6.3V
C4419	1-165-989-11	CERAMIC CHIP	10uF	10%	6.3V
C4420	1-112-717-91	CERAMIC CHIP	1uF	10%	6.3V
C4421	1-165-989-11	CERAMIC CHIP	10uF	10%	6.3V
C4422	1-112-717-91	CERAMIC CHIP	1uF	10%	6.3V
C4423	1-112-717-91	CERAMIC CHIP	1uF	10%	6.3V
C4424	1-112-717-91	CERAMIC CHIP	1uF	10%	6.3V
C4425	1-112-717-91	CERAMIC CHIP	1uF	10%	6.3V
C4426	1-112-717-91	CERAMIC CHIP	1uF	10%	6.3V
* C4427	1-112-746-11	CERAMIC CHIP	4.7uF	10%	6.3V
* C4428	1-112-746-11	CERAMIC CHIP	4.7uF	10%	6.3V
C4429	1-165-989-11	CERAMIC CHIP	10uF	10%	6.3V
C4430	1-165-989-11	CERAMIC CHIP	10uF	10%	6.3V
C4601	1-165-908-11	CERAMIC CHIP	1uF	10%	10V
C4602	1-165-908-11	CERAMIC CHIP	1uF	10%	10V

Ref. No.	Part No.	Description			
C4604	1-165-989-11	CERAMIC CHIP	10uF	10%	6.3V
C4605	1-100-609-11	TANTAL. CHIP	220uF	20%	5V
C4606	1-165-908-11	CERAMIC CHIP	1uF	10%	10V
C4607	1-165-908-11	CERAMIC CHIP	1uF	10%	10V
C4612	1-165-989-11	CERAMIC CHIP	10uF	10%	6.3V
C4613	1-165-989-11	CERAMIC CHIP	10uF	10%	6.3V
C4614	1-165-989-11	CERAMIC CHIP	10uF	10%	6.3V
C4802	1-165-989-11	CERAMIC CHIP	10uF	10%	6.3V
C4804	1-165-989-11	CERAMIC CHIP	10uF	10%	6.3V
C4805	1-125-777-11	CERAMIC CHIP	0.1uF	10%	10V
C4806	1-125-777-11	CERAMIC CHIP	0.1uF	10%	10V
C4807	1-125-777-11	CERAMIC CHIP	0.1uF	10%	10V
C4808	1-125-777-11	CERAMIC CHIP	0.1uF	10%	10V
C4809	1-127-715-11	CERAMIC CHIP	0.22uF	10%	16V
C4810	1-127-715-11	CERAMIC CHIP	0.22uF	10%	16V
C4811	1-100-567-81	CERAMIC CHIP	0.01uF	10%	25V
C5005	1-165-875-11	CERAMIC CHIP	10uF	10%	10V
C5007	1-165-875-11	CERAMIC CHIP	10uF	10%	10V
C5008	1-165-875-11	CERAMIC CHIP	10uF	10%	10V
C5009	1-165-875-11	CERAMIC CHIP	10uF	10%	10V
C5010	1-165-875-11	CERAMIC CHIP	10uF	10%	10V
C5011	1-165-875-11	CERAMIC CHIP	10uF	10%	10V
C5012	1-165-908-11	CERAMIC CHIP	1uF	10%	10V
C5201	1-165-989-11	CERAMIC CHIP	10uF	10%	6.3V
C5202	1-127-715-11	CERAMIC CHIP	0.22uF	10%	16V
C5204	1-125-777-11	CERAMIC CHIP	0.1uF	10%	10V
C5205	1-125-777-11	CERAMIC CHIP	0.1uF	10%	10V
C5206	1-125-777-11	CERAMIC CHIP	0.1uF	10%	10V
C5208	1-125-777-11	CERAMIC CHIP	0.1uF	10%	10V
C5210	1-100-966-91	CERAMIC CHIP	10uF	20%	10V
C5211	1-125-777-11	CERAMIC CHIP	0.1uF	10%	10V
C5212	1-165-908-11	CERAMIC CHIP	1uF	10%	10V
C5213	1-125-777-11	CERAMIC CHIP	0.1uF	10%	10V
C5214	1-125-777-11	CERAMIC CHIP	0.1uF	10%	10V
* C5215	1-112-298-91	CERAMIC CHIP	1uF	10%	16V
* C5216	1-112-746-11	CERAMIC CHIP	4.7uF	10%	6.3V
C5217	1-165-908-11	CERAMIC CHIP	1uF	10%	10V
C5218	1-107-823-11	CERAMIC CHIP	0.47uF	10%	16V
C5219	1-164-935-11	CERAMIC CHIP	470PF	10%	50V
C5220	1-164-937-11	CERAMIC CHIP	0.001uF	10%	50V
C5221	1-100-567-81	CERAMIC CHIP	0.01uF	10%	25V
C5222	1-165-908-11	CERAMIC CHIP	1uF	10%	10V
C5223	1-165-908-11	CERAMIC CHIP	1uF	10%	10V
C5224	1-165-908-11	CERAMIC CHIP	1uF	10%	10V
C5225	1-165-908-11	CERAMIC CHIP	1uF	10%	10V
C5226	1-165-908-11	CERAMIC CHIP	1uF	10%	10V
C5227	1-165-908-11	CERAMIC CHIP	1uF	10%	10V
C5228	1-165-908-11	CERAMIC CHIP	1uF	10%	10V
C5229	1-165-908-11	CERAMIC CHIP	1uF	10%	10V
C5230	1-137-988-91	CERAMIC CHIP	1uF	10%	35V
C5231	1-165-989-11	CERAMIC CHIP	10uF	10%	6.3V
C5232	1-165-989-11	CERAMIC CHIP	10uF	10%	6.3V
C5233	1-165-989-11	CERAMIC CHIP	10uF	10%	6.3V
C5234	1-165-989-11	CERAMIC CHIP	10uF	10%	6.3V
C5235	1-165-989-11	CERAMIC CHIP	10uF	10%	6.3V
C5236	1-165-875-11	CERAMIC CHIP	10uF	10%	10V
C5237	1-165-875-11	CERAMIC CHIP	10uF	10%	10V
C5238	1-137-988-91	CERAMIC CHIP	1uF	10%	35V

Ref. No.	Part No.	Description			
C5240	1-165-989-11	CERAMIC CHIP	10uF	10%	6.3V
C5241	1-165-989-11	CERAMIC CHIP	10uF	10%	6.3V
C5243	1-165-989-11	CERAMIC CHIP	10uF	10%	6.3V
C5244	1-165-989-11	CERAMIC CHIP	10uF	10%	6.3V
C5247	1-165-989-11	CERAMIC CHIP	10uF	10%	6.3V
C5249	1-100-611-91	CERAMIC CHIP	22uF	20%	6.3V
C5251	1-165-989-11	CERAMIC CHIP	10uF	10%	6.3V
C5253	1-165-989-11	CERAMIC CHIP	10uF	10%	6.3V
C5254	1-165-989-11	CERAMIC CHIP	10uF	10%	6.3V
C5256	1-100-597-91	CERAMIC CHIP	0.1uF	10%	25V
C5401	1-119-750-11	TANTAL. CHIP	22uF	20%	6.3V
C5404	1-100-567-81	CERAMIC CHIP	0.01uF	10%	25V
C5405	1-125-777-11	CERAMIC CHIP	0.1uF	10%	10V
C5406	1-125-777-11	CERAMIC CHIP	0.1uF	10%	10V
C5408	1-125-777-11	CERAMIC CHIP	0.1uF	10%	10V
C5409	1-100-567-81	CERAMIC CHIP	0.01uF	10%	25V
C5411	1-125-777-11	CERAMIC CHIP	0.1uF	10%	10V
C5412	1-100-567-81	CERAMIC CHIP	0.01uF	10%	25V
C5413	1-125-777-11	CERAMIC CHIP	0.1uF	10%	10V
C5414	1-164-850-11	CERAMIC CHIP	10PF	0.5PF	50V
C5415	1-164-850-11	CERAMIC CHIP	10PF	0.5PF	50V
C5416	1-125-777-11	CERAMIC CHIP	0.1uF	10%	10V
C5601	1-100-567-81	CERAMIC CHIP	0.01uF	10%	25V
C5604	1-164-850-11	CERAMIC CHIP	10PF	0.5PF	50V
C5605	1-164-850-11	CERAMIC CHIP	10PF	0.5PF	50V
C5606	1-125-777-11	CERAMIC CHIP	0.1uF	10%	10V
C5607	1-125-777-11	CERAMIC CHIP	0.1uF	10%	10V
C5608	1-125-777-11	CERAMIC CHIP	0.1uF	10%	10V
C5609	1-100-567-81	CERAMIC CHIP	0.01uF	10%	25V
C5610	1-100-567-81	CERAMIC CHIP	0.01uF	10%	25V
C5611	1-125-777-11	CERAMIC CHIP	0.1uF	10%	10V
C5612	1-125-777-11	CERAMIC CHIP	0.1uF	10%	10V
C5613	1-125-777-11	CERAMIC CHIP	0.1uF	10%	10V
C5614	1-165-908-11	CERAMIC CHIP	1uF	10%	10V
C5615	1-165-908-11	CERAMIC CHIP	1uF	10%	10V
C5617	1-100-567-81	CERAMIC CHIP	0.01uF	10%	25V
C5618	1-100-567-81	CERAMIC CHIP	0.01uF	10%	25V
C6004	1-164-939-11	CERAMIC CHIP	0.0022uF	10%	50V
C6005	1-125-777-11	CERAMIC CHIP	0.1uF	10%	10V
C6006	1-164-939-11	CERAMIC CHIP	0.0022uF	10%	50V
C6007	1-125-777-11	CERAMIC CHIP	0.1uF	10%	10V
C6008	1-125-777-11	CERAMIC CHIP	0.1uF	10%	10V
C6009	1-125-777-11	CERAMIC CHIP	0.1uF	10%	10V
C6010	1-125-777-11	CERAMIC CHIP	0.1uF	10%	10V
C6011	1-125-777-11	CERAMIC CHIP	0.1uF	10%	10V
C6013	1-164-939-11	CERAMIC CHIP	0.0022uF	10%	50V
C6014	1-164-939-11	CERAMIC CHIP	0.0022uF	10%	50V
C6015	1-119-750-11	TANTAL. CHIP	22uF	20%	6.3V
C6016	1-165-908-11	CERAMIC CHIP	1uF	10%	10V
C6203	1-164-939-11	CERAMIC CHIP	0.0022uF	10%	50V
C6204	1-125-777-11	CERAMIC CHIP	0.1uF	10%	10V
C6205	1-164-939-11	CERAMIC CHIP	0.0022uF	10%	50V
C6206	1-125-777-11	CERAMIC CHIP	0.1uF	10%	10V
C6207	1-125-777-11	CERAMIC CHIP	0.1uF	10%	10V
C6208	1-125-777-11	CERAMIC CHIP	0.1uF	10%	10V
C6209	1-125-777-11	CERAMIC CHIP	0.1uF	10%	10V
C6210	1-125-777-11	CERAMIC CHIP	0.1uF	10%	10V
C6212	1-164-939-11	CERAMIC CHIP	0.0022uF	10%	50V
C6213	1-164-939-11	CERAMIC CHIP	0.0022uF	10%	50V

Ref. No.	Part No.	Description			
C6214	1-119-750-11	TANTAL. CHIP	22uF	20%	6.3V
C6215	1-165-908-11	CERAMIC CHIP	1uF	10%	10V
C6403	1-100-567-81	CERAMIC CHIP	0.01uF	10%	25V
C6404	1-100-567-81	CERAMIC CHIP	0.01uF	10%	25V
C6405	1-165-908-11	CERAMIC CHIP	1uF	10%	10V
C6406	1-165-908-11	CERAMIC CHIP	1uF	10%	10V
C6407	1-100-567-81	CERAMIC CHIP	0.01uF	10%	25V
C6408	1-100-567-81	CERAMIC CHIP	0.01uF	10%	25V
C6409	1-164-937-11	CERAMIC CHIP	0.001uF	10%	50V
C6411	1-164-937-11	CERAMIC CHIP	0.001uF	10%	50V
C6414	1-100-597-91	CERAMIC CHIP	0.1uF	10%	25V
C6415	1-125-777-11	CERAMIC CHIP	0.1uF	10%	10V
C6416	1-125-777-11	CERAMIC CHIP	0.1uF	10%	10V
C6417	1-125-777-11	CERAMIC CHIP	0.1uF	10%	10V
C6418	1-137-934-91	TANTAL. CHIP	47uF	20%	10V
C6419	1-119-750-11	TANTAL. CHIP	22uF	20%	6.3V
C6420	1-125-777-11	CERAMIC CHIP	0.1uF	10%	10V
C6421	1-125-777-11	CERAMIC CHIP	0.1uF	10%	10V
C6422	1-125-777-11	CERAMIC CHIP	0.1uF	10%	10V
C6423	1-125-777-11	CERAMIC CHIP	0.1uF	10%	10V
C6601	1-164-937-11	CERAMIC CHIP	0.001uF	10%	50V
C6602	1-164-937-11	CERAMIC CHIP	0.001uF	10%	50V
C6603	1-164-937-11	CERAMIC CHIP	0.001uF	10%	50V
C6604	1-164-937-11	CERAMIC CHIP	0.001uF	10%	50V
C6607	1-112-717-91	CERAMIC CHIP	1uF	10%	6.3V
C6609	1-100-597-91	CERAMIC CHIP	0.1uF	10%	25V
C6610	1-125-777-11	CERAMIC CHIP	0.1uF	10%	10V
C6611	1-125-891-11	CERAMIC CHIP	0.47uF	10%	10V
C6612	1-165-908-11	CERAMIC CHIP	1uF	10%	10V
C8001	1-164-227-11	CERAMIC CHIP	0.022uF	10%	25V
C8002	1-135-149-21	TANTAL. CHIP	2.2uF	20%	10V
C8003	1-165-989-11	CERAMIC CHIP	10uF	10%	6.3V
C8004	1-127-715-11	CERAMIC CHIP	0.22uF	10%	16V
C8005	1-127-715-11	CERAMIC CHIP	0.22uF	10%	16V
C8006	1-100-597-91	CERAMIC CHIP	0.1uF	10%	25V
C8007	1-165-989-11	CERAMIC CHIP	10uF	10%	6.3V
C8008	1-127-715-11	CERAMIC CHIP	0.22uF	10%	16V
C8009	1-127-715-11	CERAMIC CHIP	0.22uF	10%	16V
C8010	1-100-597-91	CERAMIC CHIP	0.1uF	10%	25V
C8011	1-165-989-11	CERAMIC CHIP	10uF	10%	6.3V
C8012	1-100-597-91	CERAMIC CHIP	0.1uF	10%	25V
C8013	1-165-989-11	CERAMIC CHIP	10uF	10%	6.3V
C8014	1-165-989-11	CERAMIC CHIP	10uF	10%	6.3V
C8015	1-165-989-11	CERAMIC CHIP	10uF	10%	6.3V
C8016	1-117-919-11	TANTAL. CHIP	10uF	20%	6.3V
C8017	1-113-981-11	TANTAL. CHIP	22uF	20%	20V
C8018	1-100-597-91	CERAMIC CHIP	0.1uF	10%	25V
C8019	1-165-875-11	CERAMIC CHIP	10uF	10%	10V
C8020	1-114-238-91	CERAMIC CHIP	22uF	20%	10V
C8021	1-114-238-91	CERAMIC CHIP	22uF	20%	10V
C8022	1-100-597-91	CERAMIC CHIP	0.1uF	10%	25V
C8023	1-165-908-11	CERAMIC CHIP	1uF	10%	10V
C8024	1-165-908-11	CERAMIC CHIP	1uF	10%	10V
C8025	1-100-597-91	CERAMIC CHIP	0.1uF	10%	25V
C8026	1-165-989-11	CERAMIC CHIP	10uF	10%	6.3V
C8027	1-125-777-11	CERAMIC CHIP	0.1uF	10%	10V
C8028	1-100-597-91	CERAMIC CHIP	0.1uF	10%	25V
C8029	1-137-934-91	TANTAL. CHIP	47uF	20%	10V

Ref. No.	Part No.	Description			
C8030	1-165-908-11	CERAMIC CHIP	1uF	10%	10V
C8031	1-165-908-11	CERAMIC CHIP	1uF	10%	10V
C8032	1-165-897-11	TANTAL. CHIP	22uF	20%	10V
C8033	1-112-300-91	CERAMIC CHIP	4.7uF	10%	10V
C8034	1-114-238-91	CERAMIC CHIP	22uF	20%	10V
C8035	1-114-238-91	CERAMIC CHIP	22uF	20%	10V
C8036	1-112-300-91	CERAMIC CHIP	4.7uF	10%	10V
C8037	1-100-597-91	CERAMIC CHIP	0.1uF	10%	25V
C8038	1-137-934-91	TANTAL. CHIP	47uF	20%	10V
C8039	1-100-597-91	CERAMIC CHIP	0.1uF	10%	25V
C8040	1-162-977-11	CERAMIC CHIP	0.0018uF	10%	50V
C8041	1-165-989-11	CERAMIC CHIP	10uF	10%	6.3V
C8042	1-100-611-91	CERAMIC CHIP	22uF	20%	6.3V
C8043	1-164-933-11	CERAMIC CHIP	220PF	10%	50V
C8044	1-100-597-91	CERAMIC CHIP	0.1uF	10%	25V
C8045	1-112-300-91	CERAMIC CHIP	4.7uF	10%	10V
C8046	1-100-567-81	CERAMIC CHIP	0.01uF	10%	25V
C8047	1-100-611-91	CERAMIC CHIP	22uF	20%	6.3V
C8048	1-165-989-11	CERAMIC CHIP	10uF	10%	6.3V
C8049	1-112-300-91	CERAMIC CHIP	4.7uF	10%	10V
C8050	1-164-933-11	CERAMIC CHIP	220PF	10%	50V
C8051	1-165-875-11	CERAMIC CHIP	10uF	10%	10V
C8052	1-100-611-91	CERAMIC CHIP	22uF	20%	6.3V
C8053	1-137-934-91	TANTAL. CHIP	47uF	20%	10V
C8054	1-137-934-91	TANTAL. CHIP	47uF	20%	10V
C8055	1-117-919-11	TANTAL. CHIP	10uF	20%	6.3V
C8056	1-162-977-11	CERAMIC CHIP	0.0018uF	10%	50V
C8057	1-165-989-11	CERAMIC CHIP	10uF	10%	6.3V
C8058	1-100-567-81	CERAMIC CHIP	0.01uF	10%	25V
C8059	1-137-934-91	TANTAL. CHIP	47uF	20%	10V
C8060	1-100-597-91	CERAMIC CHIP	0.1uF	10%	25V
C8061	1-165-875-11	CERAMIC CHIP	10uF	10%	10V
C8062	1-128-964-91	TANTAL. CHIP	100uF	20%	6.3V
C8063	1-125-889-11	CERAMIC CHIP	2.2uF	10%	10V
C8064	1-165-989-11	CERAMIC CHIP	10uF	10%	6.3V
C8065	1-100-597-91	CERAMIC CHIP	0.1uF	10%	25V
C8066	1-165-884-11	CERAMIC CHIP	2.2uF	10%	6.3V
C8067	1-128-964-91	TANTAL. CHIP	100uF	20%	6.3V
C8068	1-125-891-11	CERAMIC CHIP	0.47uF	10%	10V
C8069	1-165-908-11	CERAMIC CHIP	1uF	10%	10V
C8070	1-125-891-11	CERAMIC CHIP	0.47uF	10%	10V
C8071	1-165-908-11	CERAMIC CHIP	1uF	10%	10V
C8073	1-112-300-91	CERAMIC CHIP	4.7uF	10%	10V
C8074	1-112-300-91	CERAMIC CHIP	4.7uF	10%	10V
C8075	1-112-300-91	CERAMIC CHIP	4.7uF	10%	10V
C8076	1-112-300-91	CERAMIC CHIP	4.7uF	10%	10V
C8077	1-112-300-91	CERAMIC CHIP	4.7uF	10%	10V
C8078	1-165-989-11	CERAMIC CHIP	10uF	10%	6.3V
C8080	1-165-875-11	CERAMIC CHIP	10uF	10%	10V
C8081	1-165-875-11	CERAMIC CHIP	10uF	10%	10V
C8084	1-165-989-11	CERAMIC CHIP	10uF	10%	6.3V
C8085	1-164-935-11	CERAMIC CHIP	470PF	10%	50V
C8088	1-164-935-11	CERAMIC CHIP	470PF	10%	50V
C8089	1-164-382-11	CERAMIC CHIP	91PF	5%	50V
C8090	1-164-936-11	CERAMIC CHIP	680PF	10%	50V
C8091	1-164-936-11	CERAMIC CHIP	680PF	10%	50V
C8092	1-164-382-11	CERAMIC CHIP	91PF	5%	50V
C8095	1-164-382-11	CERAMIC CHIP	91PF	5%	50V

Ref. No.	Part No.	Description			
C8096	1-164-382-11	CERAMIC CHIP	91PF	5%	50V
C8097	1-100-597-91	CERAMIC CHIP	0.1uF	10%	25V
C8098	1-165-989-11	CERAMIC CHIP	10uF	10%	6.3V
C8099	1-165-989-11	CERAMIC CHIP	10uF	10%	6.3V
C8100	1-165-989-11	CERAMIC CHIP	10uF	10%	6.3V
C8101	1-165-875-11	CERAMIC CHIP	10uF	10%	10V
C8102	1-117-919-11	TANTAL. CHIP	10uF	20%	6.3V
C8103	1-165-875-11	CERAMIC CHIP	10uF	10%	10V
C8104	1-165-989-11	CERAMIC CHIP	10uF	10%	6.3V
C8105	1-100-597-91	CERAMIC CHIP	0.1uF	10%	25V
C8106	1-164-858-11	CERAMIC CHIP	22PF	5%	50V
C8107	1-164-858-11	CERAMIC CHIP	22PF	5%	50V
C8108	1-100-597-91	CERAMIC CHIP	0.1uF	10%	25V
C8109	1-137-934-91	TANTAL. CHIP	47uF	20%	10V
C8111	1-165-908-11	CERAMIC CHIP	1uF	10%	10V
C8112	1-164-937-11	CERAMIC CHIP	0.001uF	10%	50V
C8113	1-164-874-11	CERAMIC CHIP	100PF	5%	50V
C8114	1-165-908-11	CERAMIC CHIP	1uF	10%	10V
C8407	1-127-715-11	CERAMIC CHIP	0.22uF	10%	16V
* C8410	1-112-298-91	CERAMIC CHIP	1uF	10%	16V
C8412	1-127-820-11	CERAMIC CHIP	4.7uF	10%	16V
C8414	1-112-300-91	CERAMIC CHIP	4.7uF	10%	10V
C8417	1-125-891-11	CERAMIC CHIP	0.47uF	10%	10V
C8419	1-100-581-81	CERAMIC CHIP	0.0047uF	10%	50V
C8420	1-164-937-11	CERAMIC CHIP	0.001uF	10%	50V
C8421	1-127-820-11	CERAMIC CHIP	4.7uF	10%	16V
C8422	1-100-597-91	CERAMIC CHIP	0.1uF	10%	25V
C8423	1-127-692-11	CERAMIC CHIP	10uF	10%	16V
C8424	1-164-937-11	CERAMIC CHIP	0.001uF	10%	50V

< CONNECTOR >

CN1001	1-817-920-11	CONNECTOR, FPC (ZIF) 80P	
* CN1002	1-816-647-61	FFC/FPC CONNECTOR (LIF) 18P	
* CN1003	1-821-501-11	CONNECTOR, FPC (ZIF) 51P	
* CN1004	1-817-560-71	CONNECTOR, FPC (ZIP) 21P	
CN1005	1-819-780-61	CONNECTOR, FPC (ZIF) 27P	
CN1006	1-817-920-11	CONNECTOR, FPC (ZIF) 80P	
* CN1008	1-816-648-51	FFC/CONNECTOR, FPC (LIF) 20P	
* CN1010	1-816-648-51	FFC/CONNECTOR, FPC (LIF) 20P	
CN1011	1-816-654-61	FFC/FPC CONNECTOR (LIF) 6P	
* CN1012	1-817-283-71	CONNECTOR, FPC (ZIF) 51P	
* CN1201	1-822-221-11	CONNECTOR, COAXIAL (RECEPTACLE)	
* CN1202	1-822-221-11	CONNECTOR, COAXIAL (RECEPTACLE)	
* CN1203	1-822-221-11	CONNECTOR, COAXIAL (RECEPTACLE)	
CN4402	(Not supplied)	CONNECTOR, COAXIAL	
(CN4402 is supplied included in VC-582 complete board (service).)			
* CN4801	1-816-648-51	FFC/CONNECTOR, FPC (LIF) 20P	
CN5002	1-580-057-11	PIN, CONNECTOR (SMD) 4P	
* CN6601	1-819-873-61	CONNECTOR, FPC (ZIF) 21P	
* CN6602	1-817-283-71	CONNECTOR, FPC (ZIF) 51P	
* CN6603	1-816-643-51	FFC/FPC CONNECTOR (LIF) 10P	

< DIODE >

D2001	8-719-056-23	DIODE	MA2S111-(K8).SO
D2002	8-719-056-23	DIODE	MA2S111-(K8).SO
D2003	8-719-056-23	DIODE	MA2S111-(K8).SO
D2301	8-719-056-23	DIODE	MA2S111-(K8).SO
* D2801	6-501-704-01	DIODE	RB886CST2R
* D2802	6-501-704-01	DIODE	RB886CST2R

Ref. No.	Part No.	Description
* D3001	6-502-947-01	DIODE RB751CS-40T2R
* D3002	6-502-947-01	DIODE RB751CS-40T2R
* D3003	6-502-947-01	DIODE RB751CS-40T2R
* D3004	6-502-947-01	DIODE RB751CS-40T2R
* D3005	6-502-947-01	DIODE RB751CS-40T2R
* D3006	6-502-947-01	DIODE RB751CS-40T2R
* D3007	6-502-947-01	DIODE RB751CS-40T2R
* D3008	6-502-947-01	DIODE RB751CS-40T2R
* D3009	6-502-947-01	DIODE RB751CS-40T2R
D3010	8-719-421-67	DIODE MA132WK
D3012	8-719-421-67	DIODE MA132WK
D4001	8-719-421-67	DIODE MA132WK
D4003	8-719-421-67	DIODE MA132WK
D4802	6-502-150-01	DIODE MA2SD320G8S0
D4803	6-502-150-01	DIODE MA2SD320G8S0
D5005	8-719-421-67	DIODE MA132WK
D5008	8-719-074-67	DIODE EDZFJ-TE61-5.6B
D5009	8-719-074-67	DIODE EDZFJ-TE61-5.6B
D5401	8-719-421-71	DIODE 1SS361-TE85L
D5402	8-719-421-71	DIODE 1SS361-TE85L
D8401	8-719-074-08	DIODE MA4ZD03001S0
		< FUSE >
*⚠F001	1-523-038-31	FUSE (0.25A/24V)
*⚠F002	1-523-038-31	FUSE (0.25A/24V)
*⚠F003	1-576-286-31	FUSE (1.4A/24V)
*⚠F004	1-576-286-31	FUSE (1.4A/24V)
*⚠F005	1-576-286-31	FUSE (1.4A/24V)
*⚠F006	1-576-286-31	FUSE (1.4A/24V)
*⚠F007	1-576-286-31	FUSE (1.4A/24V)
*⚠F008	1-576-286-31	FUSE (1.4A/24V)
		< FERRITE BEAD >
FB001	1-469-581-21	INDUCTOR, FERRITE BEAD (1005)
* FB1401	1-481-300-11	INDUCTOR, FERRITE BEAD
* FB1402	1-481-300-11	INDUCTOR, FERRITE BEAD
* FB1403	1-481-300-11	INDUCTOR, FERRITE BEAD
* FB1404	1-481-250-11	INDUCTOR, FERRITE BEAD (1005)
FB1405	1-400-620-21	INDUCTOR, FERRITE BEAD (1005)
* FB1601	1-481-300-11	INDUCTOR, FERRITE BEAD
FB2301	1-400-354-11	INDUCTOR, FERRITE BEAD (1005)
* FB2302	1-481-250-11	INDUCTOR, FERRITE BEAD (1005)
* FB2303	1-481-250-11	INDUCTOR, FERRITE BEAD (1005)
FB2801	1-400-331-11	FERRITE, EMI (SMD) (1005)
* FB4401	1-481-300-11	INDUCTOR, FERRITE BEAD
* FB4402	1-481-300-11	INDUCTOR, FERRITE BEAD
* FB4403	1-481-300-11	INDUCTOR, FERRITE BEAD
* FB4404	1-481-300-11	INDUCTOR, FERRITE BEAD
* FB4405	1-481-300-11	INDUCTOR, FERRITE BEAD
* FB4406	1-481-300-11	INDUCTOR, FERRITE BEAD
* FB5602	1-481-300-11	INDUCTOR, FERRITE BEAD
		< FILTER >
FL3401	1-234-939-21	FILTER, EMI REMOVAL (SMD)
FL3402	1-234-939-21	FILTER, EMI REMOVAL (SMD)
		< IC >
* IC1001	6-711-739-01	IC TC7WG126FK
IC1002	6-703-953-01	IC TK11134CSCL-G
IC1204	6-703-976-01	IC R1114Q181D-TR-FA
IC1205	6-703-976-01	IC R1114Q181D-TR-FA
IC1206	6-703-976-01	IC R1114Q181D-TR-FA
IC1207	6-703-976-01	IC R1114Q181D-TR-FA
IC1208	6-703-977-01	IC R1114Q331D-TR-FA
IC1209	6-703-977-01	IC R1114Q331D-TR-FA
* IC1401	6-710-308-01	IC CXD9891GG
* IC1403	6-708-444-01	IC R1114Q281D-TR-FA
IC1407	6-706-484-01	IC TC7SH04FU (T5RSOYJF)
IC1408	6-701-979-01	IC TC7WB66FK (TE85R)
IC1409	6-714-136-01	IC TC7SG125FU (T5RSY, F)
IC1410	6-714-136-01	IC TC7SG125FU (T5RSY, F)
* IC1601	6-713-564-01	IC IS42SM32160C-7BLI-TR U907A
IC2001	(Not supplied)	IC BCX255102A
(IC2001 is supplied included in VC-582 complete board (service).)		
IC2002	6-708-511-01	IC TC7SG08AFS
IC2302	6-712-850-01	IC TC7SP3125TU (5RSO, F
IC2601	(Not supplied)	IC K5R1G13ACD-AK60T
(IC2601 is supplied included in VC-582 complete board (service).)		
* IC2801	6-707-959-01	IC AN12920AAVB
IC2803	6-710-786-01	IC TC7SH125FU (T5RSOYF
IC2804	6-710-786-01	IC TC7SH125FU (T5RSOYF
* IC2806	6-712-910-01	IC NJM2878F4-46 (TE2)
* IC2807	6-714-540-01	IC MAX9654AUB+T
* IC2808	6-714-525-01	IC BH7606GU
* IC2809	6-712-135-01	IC R1173H001D-T1-F
* IC3001	6-714-362-01	IC EP3C16U256C8N
IC3002	6-700-217-01	IC TC7SZ14FU (TE85R)
IC3003	6-707-886-01	IC TC74VHCT125AFT (EKJ)
IC3004	6-710-786-01	IC TC7SH125FU (T5RSOYF
IC3005	6-710-786-01	IC TC7SH125FU (T5RSOYF
* IC3006	6-714-750-01	IC HD74LV1GT125AVSE
* IC3007	6-808-742-01	IC EPCS4SI8N (15)-BZ01
* IC3201	6-714-015-01	IC K4X56323PL-8GC6T
* IC3301	6-708-464-01	IC R1114Q251D-TR-FA
IC3302	6-705-606-01	IC R1114Q301D-TR-FA
IC3303	6-703-977-01	IC R1114Q331D-TR-FA
IC3304	6-703-977-01	IC R1114Q331D-TR-FA
IC3306	6-703-976-01	IC R1114Q181D-TR-FA
* IC3401	8-753-335-26	IC CXD4113GG-T6
* IC3601	6-714-780-01	IC K4X51323PG-8GC6T
* IC3701	6-712-050-01	IC SN65LVDS301ZQER
* IC4001	6-714-362-01	IC EP3C16U256C8N
* IC4002	6-808-743-01	IC EPCS4SI8N (15)-ST01
IC4003	6-714-136-01	IC TC7SG125FU (T5RSY, F)
IC4005	6-710-786-01	IC TC7SH125FU (T5RSOYF
IC4007	6-710-786-01	IC TC7SH125FU (T5RSOYF
IC4008	8-759-524-04	IC TC74VHC125FT (EL)
IC4009	6-710-786-01	IC TC7SH125FU (T5RSOYF
* IC4403	6-712-135-01	IC R1173H001D-T1-F
* IC4404	6-712-135-01	IC R1173H001D-T1-F
* IC4405	6-712-905-01	IC GS1572-IBE3
IC4601	6-703-976-01	IC R1114Q181D-TR-FA
* IC4602	6-708-464-01	IC R1114Q251D-TR-FA
* IC4801	6-713-468-01	IC ADV7521NKBCBZRL-80
IC4802	6-705-337-01	IC TK11150CSCL-G
* IC5201	6-808-414-01	IC MB44C017ABGF-G-ERE1
* IC5401	6-714-858-01	IC MB95005ABGL-G-125-ERE1
* IC5601	6-714-950-01	IC MB91195ABGL-G-270-ERE1
* IC5602	6-706-013-01	IC AK6514CF-E2
IC5603	6-704-974-01	IC AK6512CAS-E2
* IC6002	6-808-503-01	IC BU24130GU-E2
* IC6201	6-808-503-01	IC BU24130GU-E2
* IC6401	6-713-274-01	IC R2J30502LG
* IC6601	6-712-910-01	IC NJM2878F4-46 (TE2)
* IC6602	6-708-444-01	IC R1114Q281D-TR-FA
IC8001	6-707-104-01	IC NJM2761RB2 (TE2)
IC8002	6-702-527-01	IC AK5380VT-E2
* IC8003	6-713-574-01	IC R2A15219FP
IC8004	6-704-682-01	IC AK4384VT-E2
* IC8005	6-708-446-01	IC R1114Q311D-TR-FA
IC8006	6-707-616-01	IC AK4386VT-E2
IC8007	6-707-879-01	IC TC74VHC541FT (EKJ)
IC8008	6-707-208-01	IC TK11100CSCB-G
* IC8403	6-712-910-01	IC NJM2878F4-46 (TE2)
IC8405	6-709-933-01	IC XC9103D093MR
		< COIL >
* L1401	1-481-425-21	INDUCTOR 10uH
* L1402	1-481-425-21	INDUCTOR 10uH
* L1403	1-481-425-21	INDUCTOR 10uH
L1408	1-400-353-21	INDUCTOR 22uH
* L2001	1-481-425-21	INDUCTOR 10uH
* L2003	1-481-425-21	INDUCTOR 10uH
* L2004	1-481-425-21	INDUCTOR 10uH
* L2005	1-481-425-21	INDUCTOR 10uH
* L2006	1-481-425-21	INDUCTOR 10uH
* L2007	1-481-425-21	INDUCTOR 10uH
* L2008	1-481-425-21	INDUCTOR 10uH
* L2009	1-481-425-21	INDUCTOR 10uH
* L2803	1-481-425-21	INDUCTOR 10uH
* L2808	1-481-425-21	INDUCTOR 10uH
L3001	1-469-553-21	INDUCTOR 4.7uH
* L3002	1-400-672-11	INDUCTOR 1uH
* L3003	1-400-672-11	INDUCTOR 1uH
* L3004	1-481-102-21	INDUCTOR 10uH
* L3701	1-481-425-21	INDUCTOR 10uH
L4401	1-414-836-21	INDUCTOR 4.7nH
L4402	1-414-836-21	INDUCTOR 4.7nH
L4601	1-469-553-21	INDUCTOR 4.7uH
* L4602	1-400-672-11	INDUCTOR 1uH
* L4603	1-481-102-21	INDUCTOR 10uH
* L4802	1-481-425-21	INDUCTOR 10uH
* L4804	1-481-425-21	INDUCTOR 10uH
L5202	1-456-135-11	INDUCTOR 4.7uH
L5203	1-419-630-21	INDUCTOR 4.7uH
L5204	1-456-135-11	INDUCTOR 4.7uH
L5205	1-456-135-11	INDUCTOR 4.7uH
L5206	1-456-135-11	INDUCTOR 4.7uH
L5207	1-456-135-11	INDUCTOR 4.7uH
L5208	1-456-135-11	INDUCTOR 4.7uH
L5210	1-469-553-21	INDUCTOR 4.7uH
* L5211	1-400-411-21	INDUCTOR 4.7uH
L5212	1-469-553-21	INDUCTOR 4.7uH
* L5213	1-481-425-21	INDUCTOR 10uH
L5214	1-469-553-21	INDUCTOR 4.7uH
* L5216	1-457-647-11	INDUCTOR 100uH
L6002	1-469-967-21	INDUCTOR 10uH
L6202	1-469-967-21	INDUCTOR 10uH
L6401	1-469-967-21	INDUCTOR 10uH
* L6601	1-481-425-21	INDUCTOR 10uH
* L8001	1-481-425-21	INDUCTOR 10uH
* L8002	1-481-425-21	INDUCTOR 10uH
L8003	1-400-353-21	INDUCTOR 22uH
* L8004	1-481-425-21	INDUCTOR 10uH
* L8005	1-481-425-21	INDUCTOR 10uH
L8006	1-469-967-21	INDUCTOR 10uH
* L8007	1-481-425-21	INDUCTOR 10uH
L8008	1-456-138-11	INDUCTOR 33uH
L8009	1-456-138-11	INDUCTOR 33uH
* L8010	1-481-425-21	INDUCTOR 10uH
L8401	1-416-670-51	INDUCTOR 33uH
L8402	1-456-499-11	INDUCTOR 4.7uH
		< FILTER >
LF4801	1-457-223-11	COMMON MODE CHOKE COIL
LF4802	1-457-223-11	COMMON MODE CHOKE COIL
LF4803	1-457-223-11	COMMON MODE CHOKE COIL
LF4804	1-457-223-11	COMMON MODE CHOKE COIL
		< TRANSISTOR >
Q1001	6-551-631-01	TRANSISTOR RN1104MFV (TL3SONY)
* Q2001	6-551-623-01	TRANSISTOR 2SA2154MFV (TL3SONY)
* Q2002	6-551-623-01	TRANSISTOR 2SA2154MFV (TL3SONY)
* Q2003	6-551-623-01	TRANSISTOR 2SA2154MFV (TL3SONY)
* Q2004	6-551-623-01	TRANSISTOR 2SA2154MFV (TL3SONY)
* Q2005	6-551-623-01	TRANSISTOR 2SA2154MFV (TL3SONY)
* Q2006	6-551-623-01	TRANSISTOR 2SA2154MFV (TL3SONY)
* Q2007	6-551-771-01	TRANSISTOR UNR31AFG0LS0
Q2008	6-551-622-01	TRANSISTOR 2SC6026MFV (TL3SONY)
* Q4001	6-551-623-01	TRANSISTOR 2SA2154MFV (TL3SONY)
Q4802	6-550-179-01	TRANSISTOR RN4904FE (TPLR3)
* Q5003	6-552-123-01	TRANSISTOR ECH8652-S-TL-H
Q5004	6-551-631-01	TRANSISTOR RN1104MFV (TL3SONY)
Q5005	6-551-184-01	TRANSISTOR MCH6305-TL-E-S
Q5201	8-729-055-88	TRANSISTOR MCH3406-TL-E
* Q5202	6-552-054-01	TRANSISTOR SCH2825-TL-E
Q6401	6-551-631-01	TRANSISTOR RN1104MFV (TL3SONY)
Q6402	6-551-631-01	TRANSISTOR RN1104MFV (TL3SONY)
* Q6403	6-551-623-01	TRANSISTOR 2SA2154MFV (TL3SONY)
* Q6404	6-551-623-01	TRANSISTOR 2SA2154MFV (TL3SONY)
* Q6601	6-551-623-01	TRANSISTOR 2SA2154MFV (TL3SONY)
* Q6602	6-551-623-01	TRANSISTOR 2SA2154MFV (TL3SONY)
* Q6603	6-551-623-01	TRANSISTOR 2SA2154MFV (TL3SONY)
* Q6604	6-551-623-01	TRANSISTOR 2SA2154MFV (TL3SONY)
Q6605	6-551-631-01	TRANSISTOR RN1104MFV (TL3SONY)
Q8001	8-729-202-38	TRANSISTOR 2SC3326N-A
Q8002	8-729-202-38	TRANSISTOR 2SC3326N-A
Q8003	8-729-202-38	TRANSISTOR 2SC3326N-A
Q8004	8-729-202-38	TRANSISTOR 2SC3326N-A
Q8005	8-729-202-38	TRANSISTOR 2SC3326N-A
Q8006	8-729-202-38	TRANSISTOR 2SC3326N-A
Q8403	6-551-622-01	TRANSISTOR 2SC6026MFV (TL3SONY)
Q8404	6-551-184-01	TRANSISTOR MCH6305-TL-E-S
* Q8405	6-552-311-01	TRANSISTOR MCH5837-TL-E

Ref. No.	Part No.	Description			
		< RESISTOR >			
R1021	1-218-949-11	METAL CHIP	470	5%	1/16W
R1022	1-218-949-11	METAL CHIP	470	5%	1/16W
R1023	1-216-864-11	SHORT CHIP	0		
R1054	1-218-977-11	METAL CHIP	100K	5%	1/16W
R1055	1-218-949-11	METAL CHIP	470	5%	1/16W
R1201	1-218-990-81	SHORT CHIP	0		
R1220	1-218-990-81	SHORT CHIP	0		
R1221	1-218-990-81	SHORT CHIP	0		
R1222	1-218-990-81	SHORT CHIP	0		
R1223	1-218-990-81	SHORT CHIP	0		
R1224	1-218-990-81	SHORT CHIP	0		
R1225	1-218-990-81	SHORT CHIP	0		
R1228	1-218-990-81	SHORT CHIP	0		
R1229	1-218-990-81	SHORT CHIP	0		
R1235	1-216-864-11	SHORT CHIP	0		
R1401	1-218-953-11	METAL CHIP	1K	5%	1/16W
R1402	1-218-977-11	METAL CHIP	100K	5%	1/16W
R1403	1-218-977-11	METAL CHIP	100K	5%	1/16W
R1404	1-218-990-81	SHORT CHIP	0		
R1407	1-218-953-11	METAL CHIP	1K	5%	1/16W
R1408	1-218-990-81	SHORT CHIP	0		
R1411	1-218-990-81	SHORT CHIP	0		
R1417	1-216-864-11	SHORT CHIP	0		
R1431	1-218-990-81	SHORT CHIP	0		
R1432	1-218-990-81	SHORT CHIP	0		
R1433	1-218-990-81	SHORT CHIP	0		
R1441	1-218-990-81	SHORT CHIP	0		
R1444	1-218-990-81	SHORT CHIP	0		
R1451	1-218-935-11	METAL CHIP	33	5%	1/16W
R1452	1-218-935-11	METAL CHIP	33	5%	1/16W
R1453	1-218-935-11	METAL CHIP	33	5%	1/16W
R1605	1-218-990-81	SHORT CHIP	0		
R2001	1-218-977-11	METAL CHIP	100K	5%	1/16W
R2002	1-218-989-11	METAL CHIP	1M	5%	1/16W
R2003	1-218-990-81	SHORT CHIP	0		
R2004	1-218-933-11	METAL CHIP	22	5%	1/16W
R2006	1-218-941-81	METAL CHIP	100	5%	1/16W
R2007	1-218-951-11	METAL CHIP	680	5%	1/16W
R2008	1-218-959-11	METAL CHIP	3.3K	5%	1/16W
R2009	1-218-951-11	METAL CHIP	680	5%	1/16W
R2010	1-218-959-11	METAL CHIP	3.3K	5%	1/16W
R2011	1-218-951-11	METAL CHIP	680	5%	1/16W
R2012	1-218-959-11	METAL CHIP	3.3K	5%	1/16W
R2013	1-218-941-11	METAL CHIP	100	5%	1/16W
* R2014	1-208-869-11	METAL CHIP	180	0.5%	1/16W
* R2015	1-208-869-11	METAL CHIP	180	0.5%	1/16W
R2016	1-208-671-11	METAL CHIP	330	0.5%	1/16W
R2017	1-208-671-11	METAL CHIP	330	0.5%	1/16W
R2018	1-208-671-11	METAL CHIP	330	0.5%	1/16W
R2019	1-218-990-81	SHORT CHIP	0		
R2020	1-218-953-11	METAL CHIP	1K	5%	1/16W
R2021	1-218-958-11	METAL CHIP	2.7K	5%	1/16W
R2022	1-218-958-11	METAL CHIP	2.7K	5%	1/16W
R2023	1-208-905-11	METAL CHIP	5.6K	0.5%	1/16W
R2025	1-218-935-11	METAL CHIP	33	5%	1/16W
R2026	1-208-883-81	METAL CHIP	680	0.5%	1/16W
R2027	1-218-935-11	METAL CHIP	33	5%	1/16W

Ref. No.	Part No.	Description			
R2028	1-216-864-11	SHORT CHIP	0		
R2030	1-218-935-11	METAL CHIP	33	5%	1/16W
R2031	1-218-961-11	METAL CHIP	4.7K	5%	1/16W
R2033	1-218-965-11	METAL CHIP	10K	5%	1/16W
R2034	1-218-961-11	METAL CHIP	4.7K	5%	1/16W
R2035	1-218-961-11	METAL CHIP	4.7K	5%	1/16W
R2038	1-218-990-81	SHORT CHIP	0		
R2044	1-218-990-81	SHORT CHIP	0		
R2045	1-218-990-81	SHORT CHIP	0		
R2049	1-218-985-11	METAL CHIP	470K	5%	1/16W
R2050	1-218-977-11	METAL CHIP	100K	5%	1/16W
R2201	1-216-864-11	SHORT CHIP	0		
R2202	1-216-864-11	SHORT CHIP	0		
R2203	1-216-864-11	SHORT CHIP	0		
R2204	1-218-990-81	SHORT CHIP	0		
R2205	1-218-990-81	SHORT CHIP	0		
R2305	1-218-929-11	METAL CHIP	10	5%	1/16W
R2306	1-218-935-11	METAL CHIP	33	5%	1/16W
R2307	1-218-935-11	METAL CHIP	33	5%	1/16W
R2311	1-218-933-11	METAL CHIP	22	5%	1/16W
R2312	1-218-933-11	METAL CHIP	22	5%	1/16W
R2313	1-218-933-11	METAL CHIP	22	5%	1/16W
R2315	1-218-935-11	METAL CHIP	33	5%	1/16W
R2316	1-218-935-11	METAL CHIP	33	5%	1/16W
R2317	1-218-935-11	METAL CHIP	33	5%	1/16W
R2319	1-218-990-81	SHORT CHIP	0		
R2324	1-218-990-81	SHORT CHIP	0		
R2325	1-218-941-81	METAL CHIP	100	5%	1/16W
R2326	1-218-941-81	METAL CHIP	100	5%	1/16W
R2327	1-218-941-81	METAL CHIP	100	5%	1/16W
R2328	1-218-941-81	METAL CHIP	100	5%	1/16W
R2329	1-218-941-81	METAL CHIP	100	5%	1/16W
R2334	1-218-940-11	METAL CHIP	82	5%	1/16W
R2335	1-218-990-81	SHORT CHIP	0		
R2336	1-218-990-81	SHORT CHIP	0		
R2337	1-218-935-11	METAL CHIP	33	5%	1/16W
R2342	1-218-940-11	METAL CHIP	82	5%	1/16W
R2343	1-218-941-81	METAL CHIP	100	5%	1/16W
R2348	1-218-941-81	METAL CHIP	100	5%	1/16W
R2349	1-218-941-81	METAL CHIP	100	5%	1/16W
R2350	1-218-941-81	METAL CHIP	100	5%	1/16W
R2351	1-218-941-81	METAL CHIP	100	5%	1/16W
R2352	1-218-935-11	METAL CHIP	33	5%	1/16W
R2356	1-218-990-81	SHORT CHIP	0		
R2357	1-218-990-81	SHORT CHIP	0		
R2358	1-218-941-81	METAL CHIP	100	5%	1/16W
R2359	1-218-941-81	METAL CHIP	100	5%	1/16W
R2360	1-218-941-81	METAL CHIP	100	5%	1/16W
R2361	1-218-941-81	METAL CHIP	100	5%	1/16W
R2362	1-218-941-81	METAL CHIP	100	5%	1/16W
R2363	1-218-940-11	METAL CHIP	82	5%	1/16W
R2521	1-218-990-81	SHORT CHIP	0		
R2571	1-218-977-11	METAL CHIP	100K	5%	1/16W
R2572	1-218-977-11	METAL CHIP	100K	5%	1/16W
R2573	1-218-953-11	METAL CHIP	1K	5%	1/16W
R2574	1-218-953-11	METAL CHIP	1K	5%	1/16W
R2601	1-218-935-11	METAL CHIP	33	5%	1/16W
R2602	1-218-945-11	METAL CHIP	220	5%	1/16W
R2603	1-218-990-81	SHORT CHIP	0		

Ref. No.	Part No.	Description			
R2609	1-218-953-11	METAL CHIP	1K	5%	1/16W
R2803	1-218-990-81	SHORT CHIP	0		
R2804	1-218-990-81	SHORT CHIP	0		
R2808	1-208-860-81	METAL CHIP	75	0.5%	1/16W
R2823	1-218-948-11	METAL CHIP	390	5%	1/16W
R2824	1-218-948-11	METAL CHIP	390	5%	1/16W
R2825	1-218-948-11	METAL CHIP	390	5%	1/16W
R2826	1-208-695-11	METAL CHIP	3.3K	0.5%	1/16W
R2827	1-208-675-11	METAL CHIP	470	0.5%	1/16W
R2828	1-208-675-11	METAL CHIP	470	0.5%	1/16W
R2829	1-208-860-81	METAL CHIP	75	0.5%	1/16W
R2830	1-208-860-81	METAL CHIP	75	0.5%	1/16W
R2831	1-208-860-81	METAL CHIP	75	0.5%	1/16W
R2834	1-218-941-11	METAL CHIP	100	5%	1/16W
R2835	1-208-691-11	METAL CHIP	2.2K	0.5%	1/16W
R2836	1-208-683-11	METAL CHIP	1K	0.5%	1/16W
R2838	1-218-953-11	METAL CHIP	1K	5%	1/16W
R2839	1-218-977-11	METAL CHIP	100K	5%	1/16W
R3002	1-218-965-11	METAL CHIP	10K	5%	1/16W
R3005	1-218-929-11	METAL CHIP	10	5%	1/16W
R3011	1-218-935-11	METAL CHIP	33	5%	1/16W
R3012	1-218-990-81	SHORT CHIP	0		
R3019	1-208-911-11	METAL CHIP	10K	0.5%	1/16W
R3020	1-208-911-11	METAL CHIP	10K	0.5%	1/16W
R3022	1-208-911-11	METAL CHIP	10K	0.5%	1/16W
R3023	1-208-911-11	METAL CHIP	10K	0.5%	1/16W
R3024	1-208-911-11	METAL CHIP	10K	0.5%	1/16W
R3029	1-218-929-11	METAL CHIP	10	5%	1/16W
R3030	1-218-929-11	METAL CHIP	10	5%	1/16W
R3031	1-218-977-11	METAL CHIP	100K	5%	1/16W
R3032	1-218-941-81	METAL CHIP	100	5%	1/16W
R3033	1-218-933-11	METAL CHIP	22	5%	1/16W
R3035	1-218-935-11	METAL CHIP	33	5%	1/16W
R3039	1-218-985-11	METAL CHIP	470K	5%	1/16W
R3040	1-218-935-11	METAL CHIP	33	5%	1/16W
R3041	1-218-935-11	METAL CHIP	33	5%	1/16W
R3042	1-218-935-11	METAL CHIP	33	5%	1/16W
R3043	1-218-935-11	METAL CHIP	33	5%	1/16W
R3044	1-218-935-11	METAL CHIP	33	5%	1/16W
R3045	1-218-935-11	METAL CHIP	33	5%	1/16W
R3046	1-218-935-11	METAL CHIP	33	5%	1/16W
R3047	1-218-935-11	METAL CHIP	33	5%	1/16W
R3048	1-218-935-11	METAL CHIP	33	5%	1/16W
R3301	1-216-793-11	METAL CHIP	4.7	5%	1/10W
R3407	1-218-953-11	METAL CHIP	1K	5%	1/16W
R3408	1-218-953-11	METAL CHIP	1K	5%	1/16W
R3409	1-218-941-81	METAL CHIP	100	5%	1/16W
R3410	1-218-941-81	METAL CHIP	100	5%	1/16W
R3411	1-218-933-11	METAL CHIP	22	5%	1/16W
R3601	1-218-990-81	SHORT CHIP	0		
R3709	1-218-973-11	METAL CHIP	47K	5%	1/16W
R3710	1-218-973-11	METAL CHIP	47K	5%	1/16W
R3711	1-218-973-11	METAL CHIP	47K	5%	1/16W
R3714	1-218-973-11	METAL CHIP	47K	5%	1/16W
R3715	1-218-973-11	METAL CHIP	47K	5%	1/16W
R3716	1-218-973-11	METAL CHIP	47K	5%	1/16W
R3717	1-218-990-81	SHORT CHIP	0		
R3718	1-218-990-81	SHORT CHIP	0		
R3719	1-218-990-81	SHORT CHIP	0		

Ref. No.	Part No.	Description			
R3720	1-218-990-81	SHORT CHIP	0		
R3721	1-218-990-81	SHORT CHIP	0		
R3722	1-218-990-81	SHORT CHIP	0		
R3723	1-218-990-81	SHORT CHIP	0		
R3724	1-218-990-81	SHORT CHIP	0		
R4003	1-218-933-11	METAL CHIP	22	5%	1/16W
R4004	1-218-935-11	METAL CHIP	33	5%	1/16W
R4005	1-218-935-11	METAL CHIP	33	5%	1/16W
R4008	1-218-941-81	METAL CHIP	100	5%	1/16W
R4009	1-218-941-81	METAL CHIP	100	5%	1/16W
R4010	1-218-941-81	METAL CHIP	100	5%	1/16W
R4011	1-218-941-81	METAL CHIP	100	5%	1/16W
R4018	1-218-935-11	METAL CHIP	33	5%	1/16W
R4019	1-218-935-11	METAL CHIP	33	5%	1/16W
R4071	1-218-935-11	METAL CHIP	33	5%	1/16W
R4085	1-218-990-81	SHORT CHIP	0		
R4111	1-218-965-11	METAL CHIP	10K	5%	1/16W
R4113	1-218-941-81	METAL CHIP	100	5%	1/16W
R4115	1-218-965-11	METAL CHIP	10K	5%	1/16W
R4117	1-218-969-11	METAL CHIP	22K	5%	1/16W
R4122	1-218-965-11	METAL CHIP	10K	5%	1/16W
R4123	1-218-965-11	METAL CHIP	10K	5%	1/16W
R4124	1-216-833-11	METAL CHIP	10K	5%	1/10W
R4125	1-218-965-11	METAL CHIP	10K	5%	1/16W
R4126	1-218-965-11	METAL CHIP	10K	5%	1/16W
R4129	1-218-941-81	METAL CHIP	100	5%	1/16W
R4142	1-218-977-11	METAL CHIP	100K	5%	1/16W
R4143	1-218-941-11	METAL CHIP	100	5%	1/16W
R4149	1-218-935-11	METAL CHIP	33	5%	1/16W
R4150	1-218-935-11	METAL CHIP	33	5%	1/16W
R4152	1-218-935-11	METAL CHIP	33	5%	1/16W
R4154	1-218-990-81	SHORT CHIP	0		
R4155	1-218-968-11	METAL CHIP	18K	5%	1/16W
R4156	1-218-965-11	METAL CHIP	10K	5%	1/16W
R4414	1-218-935-11	METAL CHIP	33	5%	1/16W
R4443	1-218-941-11	METAL CHIP	100	5%	1/16W
R4444	1-208-691-11	METAL CHIP	2.2K	0.5%	1/16W
R4445	1-208-683-11	METAL CHIP	1K	0.5%	1/16W
R4446	1-208-661-11	METAL CHIP	120	0.5%	1/16W
R4447	1-208-883-81	METAL CHIP	680	0.5%	1/16W
R4448	1-208-683-11	METAL CHIP	1K	0.5%	1/16W
R4449	1-218-990-81	SHORT CHIP	0		
R4450	1-218-990-81	SHORT CHIP	0		
R4451	1-218-990-81	SHORT CHIP	0		
R4452	1-218-990-81	SHORT CHIP	0		
R4453	1-218-990-81	SHORT CHIP	0		
R4454	1-208-911-11	METAL CHIP	10K	0.5%	1/16W
R4455	1-218-990-81	SHORT CHIP	0		
R4456	1-218-953-11	METAL CHIP	1K	5%	1/16W
R4457	1-240-582-11	METAL CHIP	6.8	5%	1/16W
R4458	1-218-990-81	SHORT CHIP	0		
R4459	1-220-802-11	METAL CHIP	3.3	5%	1/16W
R4460	1-218-990-81	SHORT CHIP	0		
R4461	1-218-990-81	SHORT CHIP	0		
R4462	1-218-990-81	SHORT CHIP	0		
R4463	1-208-884-81	METAL CHIP	750	0.5%	1/16W
R4464	1-208-860-81	METAL CHIP	75	0.5%	1/16W
R4465	1-208-860-81	METAL CHIP	75	0.5%	1/16W
R4466	1-208-661-11	METAL CHIP	120	0.5%	1/16W

Ref. No.	Part No.	Description			
R4467	1-208-661-11	METAL CHIP	120	0.5%	1/16W
R4468	1-208-860-81	METAL CHIP	75	0.5%	1/16W
R4602	1-216-793-11	METAL CHIP	4.7	5%	1/10W
R4805	1-218-990-81	SHORT CHIP	0		
R4809	1-218-971-11	METAL CHIP	33K	5%	1/16W
R4810	1-208-886-81	METAL CHIP	910	0.5%	1/16W
R4816	1-218-935-11	METAL CHIP	33	5%	1/16W
R4817	1-218-935-11	METAL CHIP	33	5%	1/16W
R4818	1-218-935-11	METAL CHIP	33	5%	1/16W
R4819	1-218-935-11	METAL CHIP	33	5%	1/16W
R4820	1-218-935-11	METAL CHIP	33	5%	1/16W
R4821	1-218-935-11	METAL CHIP	33	5%	1/16W
R4822	1-218-935-11	METAL CHIP	33	5%	1/16W
R4823	1-218-935-11	METAL CHIP	33	5%	1/16W
R4824	1-218-956-11	METAL CHIP	1.8K	5%	1/16W
R4826	1-218-956-11	METAL CHIP	1.8K	5%	1/16W
R4827	1-218-973-11	METAL CHIP	47K	5%	1/16W
R5015	1-218-965-11	METAL CHIP	10K	5%	1/16W
R5016	1-218-953-11	METAL CHIP	1K	5%	1/16W
R5017	1-218-989-11	METAL CHIP	1M	5%	1/16W
R5018	1-218-945-11	METAL CHIP	220	5%	1/16W
R5019	1-218-990-81	SHORT CHIP	0		
R5201	1-218-990-81	SHORT CHIP	0		
R5202	1-218-941-81	METAL CHIP	100	5%	1/16W
R5203	1-208-927-11	METAL CHIP	47K	0.5%	1/16W
R5204	1-218-961-11	METAL CHIP	4.7K	5%	1/16W
R5205	1-218-961-11	METAL CHIP	4.7K	5%	1/16W
R5208	1-218-990-81	SHORT CHIP	0		
R5219	1-208-911-11	METAL CHIP	10K	0.5%	1/16W
R5224	1-208-935-11	METAL CHIP	100K	0.5%	1/16W
R5229	1-242-967-81	METAL CHIP	1	5%	1/16W
R5230	1-216-864-11	SHORT CHIP	0		
R5231	1-216-864-11	SHORT CHIP	0		
R5232	1-216-864-11	SHORT CHIP	0		
R5233	1-216-864-11	SHORT CHIP	0		
R5234	1-216-864-11	SHORT CHIP	0		
R5235	1-216-864-11	SHORT CHIP	0		
R5236	1-218-990-81	SHORT CHIP	0		
R5237	1-216-864-11	SHORT CHIP	0		
R5238	1-216-864-11	SHORT CHIP	0		
R5239	1-216-864-11	SHORT CHIP	0		
R5240	1-216-864-11	SHORT CHIP	0		
R5241	1-216-864-11	SHORT CHIP	0		
R5242	1-216-864-11	SHORT CHIP	0		
R5243	1-216-864-11	SHORT CHIP	0		
R5244	1-216-864-11	SHORT CHIP	0		
R5245	1-208-943-11	METAL CHIP	220K	0.5%	1/16W
R5246	1-208-911-11	METAL CHIP	10K	0.5%	1/16W
R5247	1-218-990-81	SHORT CHIP	0		
R5249	1-208-635-11	METAL CHIP	10	0.5%	1/16W
R5250	1-216-295-91	SHORT CHIP	0		
R5251	1-216-295-91	SHORT CHIP	0		
R5252	1-216-295-91	SHORT CHIP	0		
R5253	1-216-295-91	SHORT CHIP	0		
R5254	1-216-295-91	SHORT CHIP	0		
R5255	1-216-295-91	SHORT CHIP	0		
R5256	1-216-295-91	SHORT CHIP	0		
R5257	1-216-295-91	SHORT CHIP	0		

Ref. No.	Part No.	Description			
R5258	1-216-295-91	SHORT CHIP	0		
R5260	1-216-295-91	SHORT CHIP	0		
R5261	1-216-295-91	SHORT CHIP	0		
R5262	1-216-295-91	SHORT CHIP	0		
R5263	1-218-990-81	SHORT CHIP	0		
R5264	1-218-990-81	SHORT CHIP	0		
R5401	1-218-990-81	SHORT CHIP	0		
R5403	1-218-990-81	SHORT CHIP	0		
R5404	1-245-604-11	METAL CHIP	10M	5%	1/16W
R5405	1-218-965-11	METAL CHIP	10K	5%	1/16W
R5406	1-208-893-11	METAL CHIP	1.8K	0.5%	1/16W
R5407	1-218-961-11	METAL CHIP	4.7K	5%	1/16W
R5408	1-218-953-11	METAL CHIP	1K	5%	1/16W
R5410	1-208-703-11	METAL CHIP	6.8K	0.5%	1/16W
R5411	1-218-973-11	METAL CHIP	47K	5%	1/16W
R5412	1-218-953-11	METAL CHIP	1K	5%	1/16W
R5414	1-218-949-11	METAL CHIP	470	5%	1/16W
R5415	1-218-973-11	METAL CHIP	47K	5%	1/16W
R5416	1-218-965-11	METAL CHIP	10K	5%	1/16W
R5417	1-218-985-11	METAL CHIP	470K	5%	1/16W
R5418	1-218-989-11	METAL CHIP	1M	5%	1/16W
R5419	1-218-967-11	METAL CHIP	15K	5%	1/16W
R5420	1-208-927-11	METAL CHIP	47K	0.5%	1/16W
R5421	1-208-935-11	METAL CHIP	100K	0.5%	1/16W
R5422	1-218-965-11	METAL CHIP	10K	5%	1/16W
R5423	1-218-953-11	METAL CHIP	1K	5%	1/16W
R5429	1-218-977-11	METAL CHIP	100K	5%	1/16W
R5432	1-218-977-11	METAL CHIP	100K	5%	1/16W
R5433	1-218-977-11	METAL CHIP	100K	5%	1/16W
R5434	1-218-989-11	METAL CHIP	1M	5%	1/16W
R5435	1-218-953-11	METAL CHIP	1K	5%	1/16W
R5436	1-218-990-81	SHORT CHIP	0		
R5438	1-218-977-11	METAL CHIP	100K	5%	1/16W
R5439	1-208-911-11	METAL CHIP	10K	0.5%	1/16W
R5440	1-218-990-81	SHORT CHIP	0		
R5441	1-218-990-81	SHORT CHIP	0		
R5443	1-218-983-11	METAL CHIP	330K	5%	1/16W
R5444	1-218-990-81	SHORT CHIP	0		
R5445	1-218-990-81	SHORT CHIP	0		
R5446	1-218-981-91	METAL CHIP	220K	5%	1/16W
R5448	1-218-990-81	SHORT CHIP	0		
R5450	1-218-990-81	SHORT CHIP	0		
R5605	1-218-941-81	METAL CHIP	100	5%	1/16W
R5607	1-218-965-11	METAL CHIP	10K	5%	1/16W
R5608	1-218-990-81	SHORT CHIP	0		
R5610	1-218-972-11	METAL CHIP	39K	5%	1/16W
R5611	1-218-972-11	METAL CHIP	39K	5%	1/16W
R5612	1-218-953-11	METAL CHIP	1K	5%	1/16W
R5613	1-218-953-11	METAL CHIP	1K	5%	1/16W
R5615	1-218-977-11	METAL CHIP	100K	5%	1/16W
R5616	1-218-985-11	METAL CHIP	470K	5%	1/16W
R5619	1-218-973-11	METAL CHIP	47K	5%	1/16W
R5621	1-218-953-11	METAL CHIP	1K	5%	1/16W
R5622	1-218-953-11	METAL CHIP	1K	5%	1/16W
R5623	1-218-953-11	METAL CHIP	1K	5%	1/16W
R5624	1-218-989-11	METAL CHIP	1M	5%	1/16W
R5625	1-218-989-11	METAL CHIP	1M	5%	1/16W
R5626	1-218-965-11	METAL CHIP	10K	5%	1/16W

Ref. No.	Part No.	Description			
R5627	1-218-973-11	METAL CHIP	47K	5%	1/16W
R5628	1-218-989-11	METAL CHIP	1M	5%	1/16W
R5629	1-218-989-11	METAL CHIP	1M	5%	1/16W
R5630	1-218-977-11	METAL CHIP	100K	5%	1/16W
R5631	1-218-977-11	METAL CHIP	100K	5%	1/16W
R5632	1-216-864-11	SHORT CHIP	0		
R5633	1-218-990-81	SHORT CHIP	0		
R5636	1-218-977-11	METAL CHIP	100K	5%	1/16W
R5641	1-218-990-81	SHORT CHIP	0		
R6019	1-218-958-11	METAL CHIP	2.7K	5%	1/16W
R6020	1-208-721-11	METAL CHIP	39K	0.5%	1/16W
R6021	1-208-909-11	METAL CHIP	8.2K	0.5%	1/16W
R6032	1-208-893-11	METAL CHIP	1.8K	0.5%	1/16W
R6033	1-208-909-11	METAL CHIP	8.2K	0.5%	1/16W
R6036	1-208-721-11	METAL CHIP	39K	0.5%	1/16W
R6037	1-218-958-11	METAL CHIP	2.7K	5%	1/16W
R6040	1-208-721-11	METAL CHIP	39K	0.5%	1/16W
R6043	1-208-893-11	METAL CHIP	1.8K	0.5%	1/16W
R6047	1-208-893-11	METAL CHIP	1.8K	0.5%	1/16W
R6050	1-208-721-11	METAL CHIP	39K	0.5%	1/16W
R6053	1-218-965-11	METAL CHIP	10K	5%	1/16W
R6085	1-208-893-11	METAL CHIP	1.8K	0.5%	1/16W
R6086	1-208-909-11	METAL CHIP	8.2K	0.5%	1/16W
R6087	1-208-721-11	METAL CHIP	39K	0.5%	1/16W
R6088	1-208-909-11	METAL CHIP	8.2K	0.5%	1/16W
R6089	1-208-721-11	METAL CHIP	39K	0.5%	1/16W
R6090	1-218-958-11	METAL CHIP	2.7K	5%	1/16W
R6091	1-218-958-11	METAL CHIP	2.7K	5%	1/16W
R6101	1-218-990-81	SHORT CHIP	0		
R6201	1-218-956-11	METAL CHIP	1.8K	5%	1/16W
R6202	1-218-956-11	METAL CHIP	1.8K	5%	1/16W
R6203	1-208-721-11	METAL CHIP	39K	0.5%	1/16W
R6204	1-218-972-11	METAL CHIP	39K	5%	1/16W
R6211	1-218-956-11	METAL CHIP	1.8K	5%	1/16W
R6212	1-218-956-11	METAL CHIP	1.8K	5%	1/16W
R6217	1-218-972-11	METAL CHIP	39K	5%	1/16W
R6222	1-208-721-11	METAL CHIP	39K	0.5%	1/16W
R6232	1-218-965-11	METAL CHIP	10K	5%	1/16W
R6263	1-208-721-11	METAL CHIP	39K	0.5%	1/16W
R6264	1-208-721-11	METAL CHIP	39K	0.5%	1/16W
R6268	1-218-990-81	SHORT CHIP	0		
R6406	1-218-881-11	METAL CHIP	27K	0.5%	1/10W
R6408	1-218-881-11	METAL CHIP	27K	0.5%	1/10W
R6409	1-216-864-11	SHORT CHIP	0		
R6411	1-216-864-11	SHORT CHIP	0		
R6412	1-218-990-81	SHORT CHIP	0		
R6413	1-218-990-81	SHORT CHIP	0		
R6414	1-208-911-11	METAL CHIP	10K	0.5%	1/16W
R6415	1-208-911-11	METAL CHIP	10K	0.5%	1/16W
R6416	1-218-990-81	SHORT CHIP	0		
R6417	1-218-990-81	SHORT CHIP	0		
R6421	1-218-973-11	METAL CHIP	47K	5%	1/16W
R6422	1-218-973-11	METAL CHIP	47K	5%	1/16W
R6425	1-218-990-81	SHORT CHIP	0		
R6426	1-218-953-11	METAL CHIP	1K	5%	1/16W
R6427	1-218-953-11	METAL CHIP	1K	5%	1/16W
R6428	1-218-968-11	METAL CHIP	18K	5%	1/16W
R6429	1-218-968-11	METAL CHIP	18K	5%	1/16W
R6430	1-218-971-11	METAL CHIP	33K	5%	1/16W

Ref. No.	Part No.	Description			
R6431	1-218-971-11	METAL CHIP	33K	5%	1/16W
R6432	1-208-935-11	METAL CHIP	100K	0.5%	1/16W
R6433	1-208-935-11	METAL CHIP	100K	0.5%	1/16W
R6435	1-208-947-11	METAL CHIP	330K	0.5%	1/16W
R6436	1-208-947-11	METAL CHIP	330K	0.5%	1/16W
R6437	1-218-977-11	METAL CHIP	100K	5%	1/16W
R6438	1-216-832-11	METAL CHIP	8.2K	5%	1/10W
R6439	1-218-881-11	METAL CHIP	27K	0.5%	1/10W
R6440	1-216-832-11	METAL CHIP	8.2K	5%	1/10W
R6441	1-218-881-11	METAL CHIP	27K	0.5%	1/10W
R6443	1-218-929-11	METAL CHIP	10	5%	1/16W
R6508	1-218-873-11	METAL CHIP	12K	0.5%	1/10W
R6515	1-216-864-11	SHORT CHIP	0		
R6516	1-218-990-81	SHORT CHIP	0		
R6610	1-218-973-11	METAL CHIP	47K	5%	1/16W
R6611	1-218-953-11	METAL CHIP	1K	5%	1/16W
R6612	1-218-973-11	METAL CHIP	47K	5%	1/16W
R6615	1-218-973-11	METAL CHIP	47K	5%	1/16W
R6616	1-218-975-11	METAL CHIP	68K	5%	1/16W
R6617	1-218-953-11	METAL CHIP	1K	5%	1/16W
R6618	1-218-973-11	METAL CHIP	47K	5%	1/16W
R6619	1-218-953-11	METAL CHIP	1K	5%	1/16W
R6620	1-218-953-11	METAL CHIP	1K	5%	1/16W
R6621	1-218-973-11	METAL CHIP	47K	5%	1/16W
R6629	1-216-864-11	SHORT CHIP	0		
R8006	1-208-918-11	METAL CHIP	20K	0.5%	1/16W
R8010	1-218-971-11	METAL CHIP	33K	5%	1/16W
R8013	1-218-929-11	METAL CHIP	10	5%	1/16W
R8014	1-218-941-81	METAL CHIP	100	5%	1/16W
R8015	1-218-941-81	METAL CHIP	100	5%	1/16W
R8016	1-218-941-81	METAL CHIP	100	5%	1/16W
R8017	1-218-935-11	METAL CHIP	33	5%	1/16W
R8018	1-219-570-11	METAL CHIP	10M	5%	1/10W
R8019	1-245-604-11	METAL CHIP	10M	5%	1/16W
R8025	1-218-977-11	METAL CHIP	100K	5%	1/16W
R8026	1-218-970-11	METAL CHIP	27K	5%	1/16W
R8029	1-218-983-11	METAL CHIP	330K	5%	1/16W
R8030	1-218-892-11	METAL CHIP	75K	0.5%	1/10W
R8031	1-208-905-11	METAL CHIP	5.6K	0.5%	1/16W
R8032	1-218-864-11	METAL CHIP	5.1K	0.5%	1/10W
R8033	1-218-958-11	METAL CHIP	2.7K	5%	1/16W
* R8034	1-208-869-11	METAL CHIP	180	0.5%	1/16W
R8035	1-218-969-11	METAL CHIP	22K	5%	1/16W
R8036	1-218-969-11	METAL CHIP	22K	5%	1/16W
R8037	1-208-905-11	METAL CHIP	5.6K	0.5%	1/16W
R8038	1-218-864-11	METAL CHIP	5.1K	0.5%	1/10W
R8039	1-218-941-81	METAL CHIP	100	5%	1/16W
R8040	1-218-958-11	METAL CHIP	2.7K	5%	1/16W
* R8041	1-208-869-11	METAL CHIP	180	0.5%	1/16W
R8042	1-218-941-81	METAL CHIP	100	5%	1/16W
R8043	1-218-941-81	METAL CHIP	100	5%	1/16W
R8044	1-218-977-11	METAL CHIP	100K	5%	1/16W
R8046	1-218-941-81	METAL CHIP	100	5%	1/16W
R8054	1-218-953-11	METAL CHIP	1K	5%	1/16W
R8055	1-218-961-11	METAL CHIP	4.7K	5%	1/16W
R8056	1-218-961-11	METAL CHIP	4.7K	5%	1/16W
R8057	1-208-922-11	METAL CHIP	30K	0.5%	1/16W
R8058	1-208-922-11	METAL CHIP	30K	0.5%	1/16W

Ref. No.	Part No.	Description			
R8059	1-208-713-11	METAL CHIP	18K	0.5%	1/16W
R8060	1-218-941-81	METAL CHIP	100	5%	1/16W
R8061	1-218-977-11	METAL CHIP	100K	5%	1/16W
R8062	1-208-713-11	METAL CHIP	18K	0.5%	1/16W
R8063	1-218-977-11	METAL CHIP	100K	5%	1/16W
R8065	1-218-971-11	METAL CHIP	33K	5%	1/16W
R8068	1-208-911-11	METAL CHIP	10K	0.5%	1/16W
R8069	1-208-711-11	METAL CHIP	15K	0.5%	1/16W
R8070	1-208-711-11	METAL CHIP	15K	0.5%	1/16W
R8071	1-208-911-11	METAL CHIP	10K	0.5%	1/16W
R8072	1-208-911-11	METAL CHIP	10K	0.5%	1/16W
R8073	1-218-971-11	METAL CHIP	33K	5%	1/16W
R8074	1-208-911-11	METAL CHIP	10K	0.5%	1/16W
R8076	1-208-712-11	METAL CHIP	16K	0.5%	1/16W
R8077	1-208-712-11	METAL CHIP	16K	0.5%	1/16W
R8080	1-208-712-11	METAL CHIP	16K	0.5%	1/16W
R8082	1-208-712-11	METAL CHIP	16K	0.5%	1/16W
R8083	1-208-713-11	METAL CHIP	18K	0.5%	1/16W
R8084	1-208-713-11	METAL CHIP	18K	0.5%	1/16W
R8085	1-208-712-11	METAL CHIP	16K	0.5%	1/16W
R8087	1-218-971-11	METAL CHIP	33K	5%	1/16W
R8088	1-208-712-11	METAL CHIP	16K	0.5%	1/16W
R8094	1-211-979-11	METAL CHIP	27	0.5%	1/10W
R8095	1-211-979-11	METAL CHIP	27	0.5%	1/10W
R8096	1-211-979-11	METAL CHIP	27	0.5%	1/10W
R8097	1-211-979-11	METAL CHIP	27	0.5%	1/10W
R8098	1-211-979-11	METAL CHIP	27	0.5%	1/10W
R8099	1-211-979-11	METAL CHIP	27	0.5%	1/10W
R8100	1-218-953-11	METAL CHIP	1K	5%	1/16W
R8101	1-218-941-81	METAL CHIP	100	5%	1/16W
R8102	1-218-953-11	METAL CHIP	1K	5%	1/16W
R8103	1-218-941-81	METAL CHIP	100	5%	1/16W
R8104	1-218-953-11	METAL CHIP	1K	5%	1/16W
R8105	1-218-941-81	METAL CHIP	100	5%	1/16W
R8106	1-218-941-81	METAL CHIP	100	5%	1/16W
R8107	1-218-953-11	METAL CHIP	1K	5%	1/16W
R8108	1-218-941-81	METAL CHIP	100	5%	1/16W
R8109	1-218-941-81	METAL CHIP	100	5%	1/16W
R8110	1-218-941-81	METAL CHIP	100	5%	1/16W
R8112	1-211-975-11	METAL CHIP	18	0.5%	1/10W
R8113	1-211-975-11	METAL CHIP	18	0.5%	1/10W
R8114	1-211-975-11	METAL CHIP	18	0.5%	1/10W
R8115	1-211-975-11	METAL CHIP	18	0.5%	1/10W
R8116	1-211-975-11	METAL CHIP	18	0.5%	1/10W
R8117	1-211-975-11	METAL CHIP	18	0.5%	1/10W
R8119	1-218-953-11	METAL CHIP	1K	5%	1/16W
R8124	1-218-977-11	METAL CHIP	100K	5%	1/16W
R8125	1-218-953-11	METAL CHIP	1K	5%	1/16W
R8126	1-218-989-11	METAL CHIP	1M	5%	1/16W
R8127	1-218-989-11	METAL CHIP	1M	5%	1/16W
R8128	1-218-953-11	METAL CHIP	1K	5%	1/16W
R8129	1-218-953-11	METAL CHIP	1K	5%	1/16W
R8130	1-216-797-11	METAL CHIP	10	5%	1/10W
R8131	1-216-797-11	METAL CHIP	10	5%	1/10W
R8139	1-216-803-11	METAL CHIP	33	5%	1/10W
R8140	1-216-803-11	METAL CHIP	33	5%	1/10W
R8141	1-216-803-11	METAL CHIP	33	5%	1/10W
R8142	1-216-803-11	METAL CHIP	33	5%	1/10W

Ref. No.	Part No.	Description			
R8143	1-216-803-11	METAL CHIP	33	5%	1/10W
R8146	1-218-941-81	METAL CHIP	100	5%	1/16W
R8147	1-218-941-81	METAL CHIP	100	5%	1/16W
R8148	1-218-941-81	METAL CHIP	100	5%	1/16W
R8149	1-218-941-81	METAL CHIP	100	5%	1/16W
R8150	1-218-941-81	METAL CHIP	100	5%	1/16W
R8169	1-216-864-11	SHORT CHIP	0		
R8170	1-218-982-11	METAL CHIP	270K	5%	1/16W
R8172	1-208-935-11	METAL CHIP	100K	0.5%	1/16W
R8176	1-218-973-11	METAL CHIP	47K	5%	1/16W
R8177	1-218-973-11	METAL CHIP	47K	5%	1/16W
R8411	1-218-446-11	METAL CHIP	1	5%	1/10W
R8418	1-218-446-11	METAL CHIP	1	5%	1/10W
R8419	1-218-990-81	SHORT CHIP	0		
R8420	1-218-941-81	METAL CHIP	100	5%	1/16W
R8423	1-218-977-11	METAL CHIP	100K	5%	1/16W
R8426	1-218-977-11	METAL CHIP	100K	5%	1/16W
R8427	1-218-959-11	METAL CHIP	3.3K	5%	1/16W
R8428	1-218-973-11	METAL CHIP	47K	5%	1/16W
R8429	1-218-973-11	METAL CHIP	47K	5%	1/16W
R8432	1-218-978-11	METAL CHIP	120K	5%	1/16W
R8433	1-208-709-11	METAL CHIP	12K	0.5%	1/16W
R8434	1-218-961-11	METAL CHIP	4.7K	5%	1/16W

< COMPOSITION CIRCUIT BLOCK >

RB1001	1-234-375-21	RES, NETWORK	1K (1005X4)		
RB2001	1-234-378-21	RES, NETWORK	10K (1005X4)		
RB2002	1-234-375-21	RES, NETWORK	1K (1005X4)		
RB2003	1-234-375-21	RES, NETWORK	1K (1005X4)		
RB2004	1-234-378-21	RES, NETWORK	10K (1005X4)		
RB2005	1-234-378-21	RES, NETWORK	10K (1005X4)		
RB2006	1-234-375-21	RES, NETWORK	1K (1005X4)		
RB2007	1-234-375-21	RES, NETWORK	1K (1005X4)		
RB2008	1-234-375-21	RES, NETWORK	1K (1005X4)		
RB2009	1-234-378-21	RES, NETWORK	10K (1005X4)		

< OSCILLATOR >

* VCO441	1-814-093-11	OSCILLATOR (VOLTAGE CONTROL) (1.5GHz)	

< VIBRATOR >

* X1403	1-813-907-41	QUARTZ CRYSTAL OSCILLATOR (83.076923MHz)	
* X1404	1-813-906-41	QUARTZ CRYSTAL OSCILLATOR (83.16MHz)	
* X2001	1-813-403-81	QUARTZ CRYSTAL OSCILLATOR (12MHz)	
* X5402	1-813-709-61	QUARTZ CRYSTAL UNIT FOR OSCILLATOR	(32.768kHz)
* X5601	1-767-205-81	VIBRATOR, CRYSTAL (20MHz)	

A-1752-131-A VF-179 BOARD, COMPLETE
****

< CAPACITOR >

* C6201	1-112-746-11	CERAMIC CHIP	4.7uF	10%	6.3V
C6202	1-100-611-91	CERAMIC CHIP	22uF	20%	6.3V
* C6203	1-112-746-11	CERAMIC CHIP	4.7uF	10%	6.3V
* C6204	1-112-746-11	CERAMIC CHIP	4.7uF	10%	6.3V
C6205	1-100-611-91	CERAMIC CHIP	22uF	20%	6.3V
C6206	1-125-777-11	CERAMIC CHIP	0.1uF	10%	10V
C6207	1-125-777-11	CERAMIC CHIP	0.1uF	10%	10V
C6208	1-125-777-11	CERAMIC CHIP	0.1uF	10%	10V
C6209	1-125-777-11	CERAMIC CHIP	0.1uF	10%	10V
C6210	1-165-908-11	CERAMIC CHIP	1uF	10%	10V
C6211	1-165-908-11	CERAMIC CHIP	1uF	10%	10V
C6212	1-165-884-11	CERAMIC CHIP	2.2uF	10%	6.3V
C6213	1-100-581-81	CERAMIC CHIP	0.0047uF	10%	50V
C6214	1-119-923-11	CERAMIC CHIP	0.047uF	10%	10V
C6215	1-165-908-11	CERAMIC CHIP	1uF	10%	10V
C6216	1-165-908-11	CERAMIC CHIP	1uF	10%	10V
C6217	1-125-777-11	CERAMIC CHIP	0.1uF	10%	10V
C6218	1-125-777-11	CERAMIC CHIP	0.1uF	10%	10V
C6219	1-125-777-11	CERAMIC CHIP	0.1uF	10%	10V
C6220	1-165-908-11	CERAMIC CHIP	1uF	10%	10V
C6221	1-165-908-11	CERAMIC CHIP	1uF	10%	10V
C6222	1-100-567-81	CERAMIC CHIP	0.01uF	10%	25V
C6223	1-125-777-11	CERAMIC CHIP	0.1uF	10%	10V
* C6224	1-112-746-11	CERAMIC CHIP	4.7uF	10%	6.3V
* C6225	1-112-746-11	CERAMIC CHIP	4.7uF	10%	6.3V
* C6226	1-112-746-11	CERAMIC CHIP	4.7uF	10%	6.3V
* C6227	1-112-746-11	CERAMIC CHIP	4.7uF	10%	6.3V

< CONNECTOR >

* CN6201	1-817-829-81	CONNECTOR, FPC (ZIF) 27P	
* CN6202	1-821-202-81	CONNECTOR, FPC (ZIF) 45P	

< IC >

* IC6201	6-712-180-01	IC IR3Y80Y6	

< COIL >

* L6201	1-481-425-21	INDUCTOR	10uH
* L6202	1-481-425-21	INDUCTOR	10uH
* L6203	1-481-425-21	INDUCTOR	10uH
* L6204	1-481-425-21	INDUCTOR	10uH
* L6205	1-481-425-21	INDUCTOR	10uH

< RESISTOR >

R6206	1-208-911-11	METAL CHIP	10K	0.5%	1/16W
R6207	1-208-699-11	METAL CHIP	4.7K	0.5%	1/16W
R6209	1-218-977-11	METAL CHIP	100K	5%	1/16W
R6213	1-218-953-11	METAL CHIP	1K	5%	1/16W

A-1752-130-A XL-011 BOARD, COMPLETE
****
(IC5952 is not supplied, but this is included in XL-011 complete board.)

< CAPACITOR >

C5815	1-162-964-11	CERAMIC CHIP	0.001uF	5%	50V
C5817	1-128-594-11	ELECT CHIP	1uF	20%	50V
C5818	1-128-594-11	ELECT CHIP	1uF	20%	50V
C5861	1-165-989-11	CERAMIC CHIP	10uF	10%	6.3V
C5862	1-165-989-11	CERAMIC CHIP	10uF	10%	6.3V
C5863	1-165-875-11	CERAMIC CHIP	10uF	10%	10V
C5865	1-128-594-11	ELECT CHIP	1uF	20%	50V
C5866	1-128-594-11	ELECT CHIP	1uF	20%	50V
C5867	1-128-594-11	ELECT CHIP	1uF	20%	50V
C5868	1-128-594-11	ELECT CHIP	1uF	20%	50V
C5915	1-162-964-11	CERAMIC CHIP	0.001uF	5%	50V
C5917	1-128-594-11	ELECT CHIP	1uF	20%	50V
C5918	1-128-594-11	ELECT CHIP	1uF	20%	50V
C5960	1-137-910-11	TANTAL. CHIP	10uF	20%	16V
C5961	1-125-777-11	CERAMIC CHIP	0.1uF	10%	10V
C5963	1-125-777-11	CERAMIC CHIP	0.1uF	10%	10V
C5964	1-163-137-00	CERAMIC CHIP	680PF	5%	50V
C5965	1-113-984-11	TANTAL. CHIP	1.5uF	20%	35V
C5966	1-113-984-11	TANTAL. CHIP	1.5uF	20%	35V
C5967	1-113-984-11	TANTAL. CHIP	1.5uF	20%	35V
C5968	1-113-984-11	TANTAL. CHIP	1.5uF	20%	35V
C5969	1-113-984-11	TANTAL. CHIP	1.5uF	20%	35V
C5972	1-113-984-11	TANTAL. CHIP	1.5uF	20%	35V
C5973	1-112-300-91	CERAMIC CHIP	4.7uF	10%	10V
C5974	1-112-300-91	CERAMIC CHIP	4.7uF	10%	10V
C5975	1-164-937-11	CERAMIC CHIP	0.001uF	10%	50V
C5978	1-127-820-11	CERAMIC CHIP	4.7uF	10%	16V

< CONNECTOR >

* CN5801	1-816-650-51	FFC/CONNECTOR, FPC (LIF) 24P	
CN5802	1-820-791-11	XLR CONNECTOR (RECEPTACLE) 3P	

< DIODE >

D5801	8-719-056-23	DIODE	MA2S111-(K8).SO
D5802	8-719-056-23	DIODE	MA2S111-(K8).SO
D5803	8-719-056-23	DIODE	MA2S111-(K8).SO
D5804	8-719-056-23	DIODE	MA2S111-(K8).SO
D5851	8-719-056-23	DIODE	MA2S111-(K8).SO
D5852	8-719-056-23	DIODE	MA2S111-(K8).SO
D5853	8-719-056-23	DIODE	MA2S111-(K8).SO
D5854	8-719-056-23	DIODE	MA2S111-(K8).SO
D5855	8-719-056-23	DIODE	MA2S111-(K8).SO
D5856	8-719-056-23	DIODE	MA2S111-(K8).SO
D5857	8-719-056-23	DIODE	MA2S111-(K8).SO
D5858	8-719-056-23	DIODE	MA2S111-(K8).SO
D5901	8-719-056-23	DIODE	MA2S111-(K8).SO
D5902	8-719-056-23	DIODE	MA2S111-(K8).SO
D5903	8-719-056-23	DIODE	MA2S111-(K8).SO
D5904	8-719-056-23	DIODE	MA2S111-(K8).SO
D5952	6-500-314-01	DIODE	DAN222MT2L
D5953	6-501-123-01	DIODE	RB160M-60TR

< IC >

* IC5801	6-710-823-01	IC	NJM2737RB1 (TE2)
IC5851	6-706-906-01	IC	NJM2732RB1 (TE2)
* IC5901	6-710-823-01	IC	NJM2737RB1 (TE2)
IC5952	(Not supplied)	IC	TK11840LTL-G

(IC5952 is supplied included in XL-011 complete board.)

< COIL >

* L5801	1-481-425-21	INDUCTOR	10uH
* L5802	1-481-425-21	INDUCTOR	10uH
* L5901	1-481-425-21	INDUCTOR	10uH
* L5902	1-481-425-21	INDUCTOR	10uH
L5951	1-456-499-11	INDUCTOR	4.7uH
L5953	1-456-136-21	INDUCTOR	10uH

< TRANSISTOR >

Q5803	6-551-294-01	TRANSISTOR	MCH6606-TL-E
Q5804	6-551-294-01	TRANSISTOR	MCH6606-TL-E
Q5805	6-551-622-01	TRANSISTOR	2SC6026MFV (TL3SONY)

Ver. 1.1 2010.01
The changed portions from
Ver. 1.0 are shown in blue.

Ref. No.	Part No.	Description			
* Q5806	6-551-625-01	TRANSISTOR	RN2104MFV (TL3SONY)		
Q5807	6-550-356-01	TRANSISTOR	MCH6616-TL-E		
Q5808	8-729-044-37	TRANSISTOR	LSK3019FP8TL		
Q5809	6-551-631-01	TRANSISTOR	RN1104MFV (TL3SONY)		
Q5903	6-551-294-01	TRANSISTOR	MCH6606-TL-E		
Q5904	6-551-294-01	TRANSISTOR	MCH6606-TL-E		
Q5905	6-551-622-01	TRANSISTOR	2SC6026MFV (TL3SONY)		
* Q5906	6-551-625-01	TRANSISTOR	RN2104MFV (TL3SONY)		
Q5907	6-550-356-01	TRANSISTOR	MCH6616-TL-E		
Q5908	8-729-044-37	TRANSISTOR	LSK3019FP8TL		
Q5909	6-551-631-01	TRANSISTOR	RN1104MFV (TL3SONY)		
Q5953	8-729-044-37	TRANSISTOR	LSK3019FP8TL		
Q5954	8-729-048-72	TRANSISTOR	2SK2615		
⚠ Q5955	6-551-622-01	TRANSISTOR	2SC6026MFV (TL3SONY)		
Q5956	6-551-622-01	TRANSISTOR	2SC6026MFV (TL3SONY)		
Q5957	6-551-622-01	TRANSISTOR	2SC6026MFV (TL3SONY)		
⚠ Q5958	8-729-119-64	TRANSISTOR	2SA811A-C17		
⚠ Q5959	8-729-119-64	TRANSISTOR	2SA811A-C17		
		< RESISTOR >			
R5801	1-218-877-11	METAL CHIP	18K	0.5%	1/10W
R5802	1-218-877-11	METAL CHIP	18K	0.5%	1/10W
R5803	1-218-877-11	METAL CHIP	18K	0.5%	1/10W
R5804	1-218-877-11	METAL CHIP	18K	0.5%	1/10W
R5805	1-218-853-11	METAL CHIP	1.8K	0.5%	1/10W
R5806	1-218-985-11	METAL CHIP	470K	5%	1/16W
R5807	1-218-877-11	METAL CHIP	18K	0.5%	1/10W
R5808	1-218-853-11	METAL CHIP	1.8K	0.5%	1/10W
R5809	1-218-985-11	METAL CHIP	470K	5%	1/16W
R5810	1-218-877-11	METAL CHIP	18K	0.5%	1/10W
R5811	1-218-877-11	METAL CHIP	18K	0.5%	1/10W
R5812	1-218-877-11	METAL CHIP	18K	0.5%	1/10W
R5813	1-216-817-11	METAL CHIP	470	5%	1/10W
R5814	1-216-817-11	METAL CHIP	470	5%	1/10W
R5815	1-208-711-11	METAL CHIP	15K	0.5%	1/16W
R5816	1-208-909-11	METAL CHIP	8.2K	0.5%	1/16W
R5817	1-208-697-11	METAL CHIP	3.9K	0.5%	1/16W
R5818	1-208-697-11	METAL CHIP	3.9K	0.5%	1/16W
R5821	1-218-835-11	METAL CHIP	330	0.5%	1/10W
R5822	1-218-860-11	METAL CHIP	3.6K	0.5%	1/10W
R5823	1-218-835-11	METAL CHIP	330	0.5%	1/10W
R5824	1-218-860-11	METAL CHIP	3.6K	0.5%	1/10W
R5825	1-216-797-11	METAL CHIP	10	5%	1/10W
R5826	1-216-797-11	METAL CHIP	10	5%	1/10W
R5832	1-208-911-11	METAL CHIP	10K	0.5%	1/16W
R5833	1-208-911-11	METAL CHIP	10K	0.5%	1/16W
R5834	1-208-911-11	METAL CHIP	10K	0.5%	1/16W
R5835	1-208-911-11	METAL CHIP	10K	0.5%	1/16W
R5836	1-218-981-91	METAL CHIP	220K	5%	1/16W
R5837	1-218-981-91	METAL CHIP	220K	5%	1/16W
R5838	1-218-977-11	METAL CHIP	100K	5%	1/16W
R5839	1-218-977-11	METAL CHIP	100K	5%	1/16W
R5840	1-218-977-11	METAL CHIP	100K	5%	1/16W
R5841	1-218-875-11	METAL CHIP	15K	0.5%	1/10W
R5842	1-208-911-11	METAL CHIP	10K	0.5%	1/16W
R5843	1-218-977-11	METAL CHIP	100K	5%	1/16W
R5851	1-218-901-11	METAL CHIP	180K	0.5%	1/10W
R5852	1-218-901-11	METAL CHIP	180K	0.5%	1/10W
R5853	1-218-901-11	METAL CHIP	180K	0.5%	1/10W
R5854	1-218-901-11	METAL CHIP	180K	0.5%	1/10W
R5855	1-218-878-11	METAL CHIP	20K	0.5%	1/10W
R5856	1-218-878-11	METAL CHIP	20K	0.5%	1/10W
R5857	1-218-878-11	METAL CHIP	20K	0.5%	1/10W
R5858	1-218-878-11	METAL CHIP	20K	0.5%	1/10W
R5859	1-218-871-11	METAL CHIP	10K	0.5%	1/10W
R5860	1-218-871-11	METAL CHIP	10K	0.5%	1/10W
R5861	1-218-871-11	METAL CHIP	10K	0.5%	1/10W
R5862	1-218-871-11	METAL CHIP	10K	0.5%	1/10W
R5863	1-208-911-11	METAL CHIP	10K	0.5%	1/16W
R5864	1-208-911-11	METAL CHIP	10K	0.5%	1/16W
R5865	1-208-911-11	METAL CHIP	10K	0.5%	1/16W
R5866	1-208-911-11	METAL CHIP	10K	0.5%	1/16W
R5867	1-216-797-11	METAL CHIP	10	5%	1/10W
R5868	1-216-797-11	METAL CHIP	10	5%	1/10W
R5901	1-218-877-11	METAL CHIP	18K	0.5%	1/10W
R5902	1-218-877-11	METAL CHIP	18K	0.5%	1/10W
R5903	1-218-877-11	METAL CHIP	18K	0.5%	1/10W
R5904	1-218-877-11	METAL CHIP	18K	0.5%	1/10W
R5905	1-218-853-11	METAL CHIP	1.8K	0.5%	1/10W
R5906	1-218-985-11	METAL CHIP	470K	5%	1/16W
R5907	1-218-877-11	METAL CHIP	18K	0.5%	1/10W
R5908	1-218-853-11	METAL CHIP	1.8K	0.5%	1/10W
R5909	1-218-985-11	METAL CHIP	470K	5%	1/16W
R5910	1-218-877-11	METAL CHIP	18K	0.5%	1/10W
R5911	1-218-877-11	METAL CHIP	18K	0.5%	1/10W
R5912	1-218-877-11	METAL CHIP	18K	0.5%	1/10W
R5913	1-216-817-11	METAL CHIP	470	5%	1/10W
R5914	1-216-817-11	METAL CHIP	470	5%	1/10W
R5915	1-208-711-11	METAL CHIP	15K	0.5%	1/16W
R5916	1-208-909-11	METAL CHIP	8.2K	0.5%	1/16W
R5917	1-208-697-11	METAL CHIP	3.9K	0.5%	1/16W
R5918	1-208-697-11	METAL CHIP	3.9K	0.5%	1/16W
R5921	1-218-835-11	METAL CHIP	330	0.5%	1/10W
R5922	1-218-835-11	METAL CHIP	330	0.5%	1/10W
R5923	1-218-860-11	METAL CHIP	3.6K	0.5%	1/10W
R5924	1-218-860-11	METAL CHIP	3.6K	0.5%	1/10W
R5925	1-216-797-11	METAL CHIP	10	5%	1/10W
R5926	1-216-797-11	METAL CHIP	10	5%	1/10W
R5932	1-208-911-11	METAL CHIP	10K	0.5%	1/16W
R5933	1-208-911-11	METAL CHIP	10K	0.5%	1/16W
R5934	1-208-911-11	METAL CHIP	10K	0.5%	1/16W
R5935	1-208-911-11	METAL CHIP	10K	0.5%	1/16W
R5936	1-218-981-91	METAL CHIP	220K	5%	1/16W
R5937	1-218-981-91	METAL CHIP	220K	5%	1/16W
R5938	1-218-977-11	METAL CHIP	100K	5%	1/16W
R5939	1-218-977-11	METAL CHIP	100K	5%	1/16W
R5940	1-218-977-11	METAL CHIP	100K	5%	1/16W
R5941	1-218-875-11	METAL CHIP	15K	0.5%	1/10W
R5942	1-208-911-11	METAL CHIP	10K	0.5%	1/16W
R5943	1-218-977-11	METAL CHIP	100K	5%	1/16W
R5960	1-218-989-11	METAL CHIP	1M	5%	1/16W
R5961	1-208-883-81	METAL CHIP	680	0.5%	1/16W
R5962	1-208-911-11	METAL CHIP	10K	0.5%	1/16W
R5963	1-218-853-11	METAL CHIP	1.8K	0.5%	1/10W
R5964	1-208-955-11	METAL CHIP	680K	0.5%	1/16W
R5965	1-208-944-81	METAL CHIP	240K	0.5%	1/16W
R5966	1-208-911-11	METAL CHIP	10K	0.5%	1/16W
R5967	1-218-970-11	METAL CHIP	27K	5%	1/16W
R5968	1-218-977-11	METAL CHIP	100K	5%	1/16W
R5969	1-218-977-11	METAL CHIP	100K	5%	1/16W
R5970	1-218-973-11	METAL CHIP	47K	5%	1/16W
R5971	1-218-973-11	METAL CHIP	47K	5%	1/16W
R5972	1-218-973-11	METAL CHIP	47K	5%	1/16W
R5973	1-218-973-11	METAL CHIP	47K	5%	1/16W
R5974	1-216-849-11	METAL CHIP	220K	5%	1/10W
R5975	1-216-849-11	METAL CHIP	220K	5%	1/10W
R5976	1-208-894-81	METAL CHIP	2K	0.5%	1/16W
R5981	1-216-817-11	METAL CHIP	470	5%	1/10W
R5982	1-216-817-11	METAL CHIP	470	5%	1/10W
R5983	1-216-817-11	METAL CHIP	470	5%	1/10W
R5984	1-216-817-11	METAL CHIP	470	5%	1/10W
R5985	1-218-977-11	METAL CHIP	100K	5%	1/16W
R5986	1-218-977-11	METAL CHIP	100K	5%	1/16W

Ref. No.	Part No.	Description

3-1. ASSEMBLY

Assembly-1: Confirm the Diopter Adjustment Lever is on the left side when installing the VF Lens Assy.

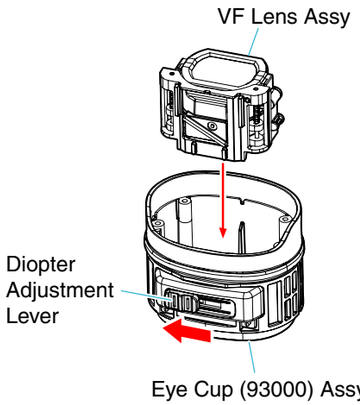

Assembly-2: How to arrange Harnesses (SW-116).

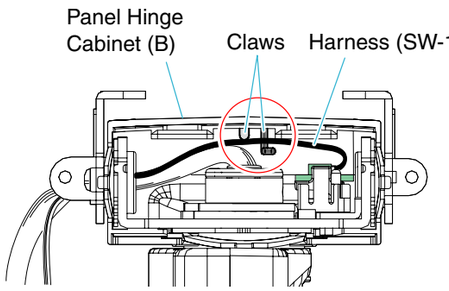

Assembly-3: How to bent the Speaker Grille.

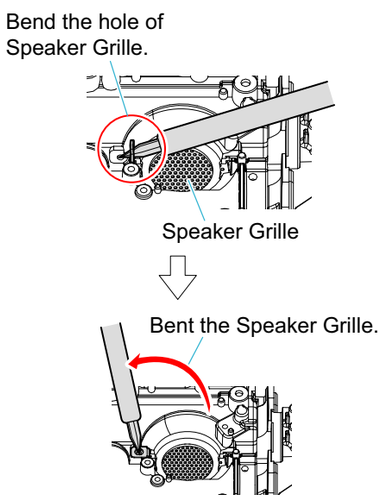

Assembly-4: How to arrange Harnesses and Flexible Board.

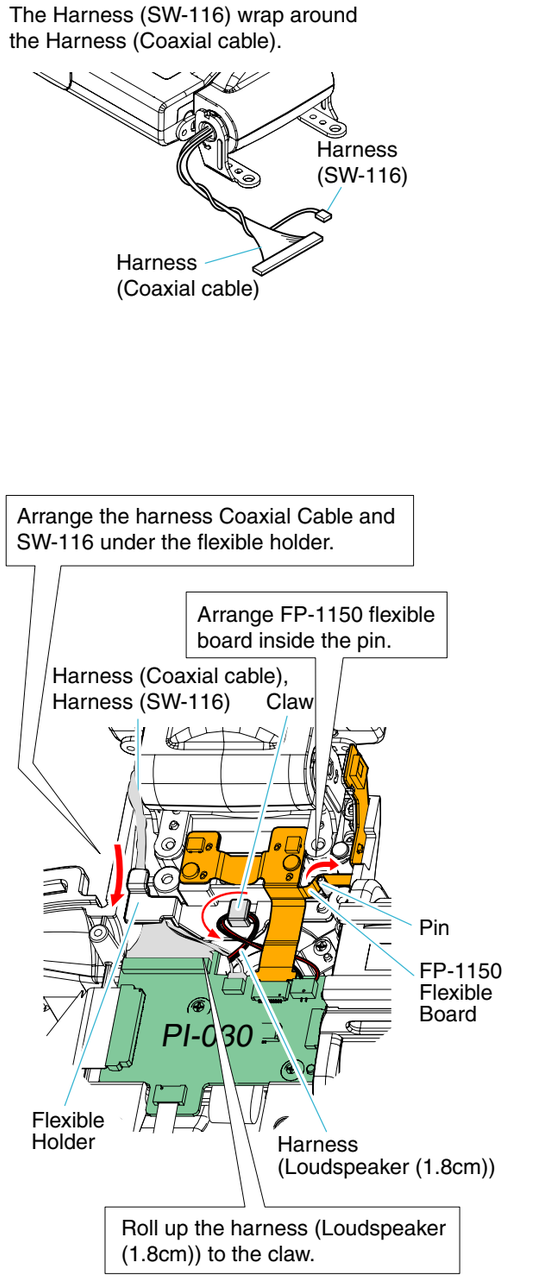
The Harness (SW-116) wrap around the Harness (Coaxial cable).
Harness (SW-116)
Harness (Coaxial cable)
Arrange the harness Coaxial Cable and SW-116 under the flexible holder.
Arrange FP-1150 flexible board inside the pin.
Harness (Coaxial cable), Harness (SW-116)
Claw
Pin
FP-1150 Flexible Board
Flexible Holder
Harness (Loudspeaker (1.8cm))
Roll up the harness (Loudspeaker (1.8cm)) to the claw.

Assembly-5: On installation of the GS-010 Board, adjust the position of the switch. (EXCEPT NX5C/NX5M)

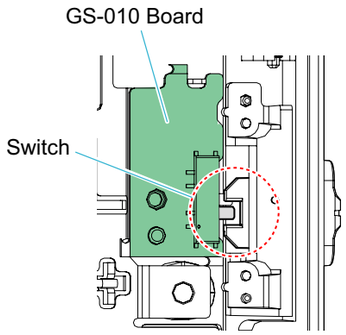

Assembly-6: On installation of the TS-157 Board, adjust the position of the switch.

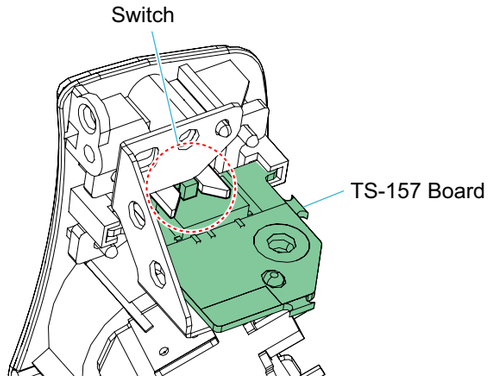

Assembly-7: On installation of the Cabinet (R) section, adjust the position of the ND filter switch.

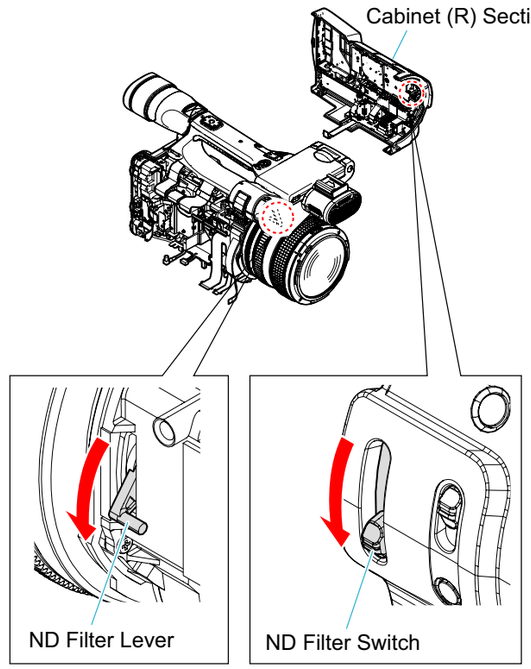

Assembly-8: How to arrange Harness (Coaxial Cable).

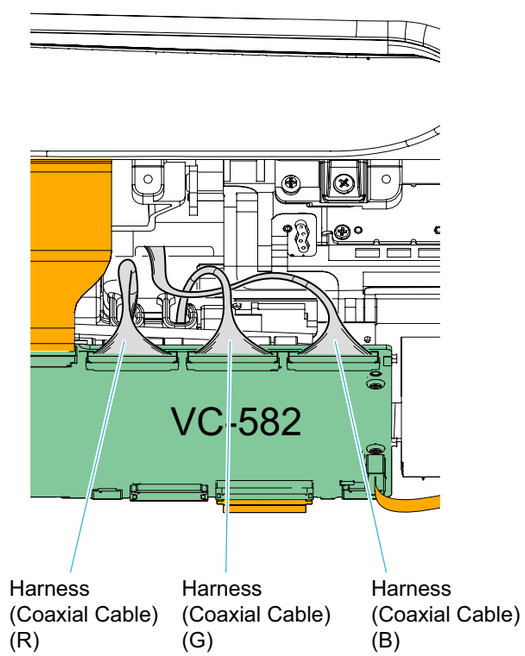

4. BLOCK DIAGRAMS

4-1. OVERALL BLOCK DIAGRAM (1/7)

( ) : Number in parenthesis ( ) indicates the division number of schematic diagram where the component is located.

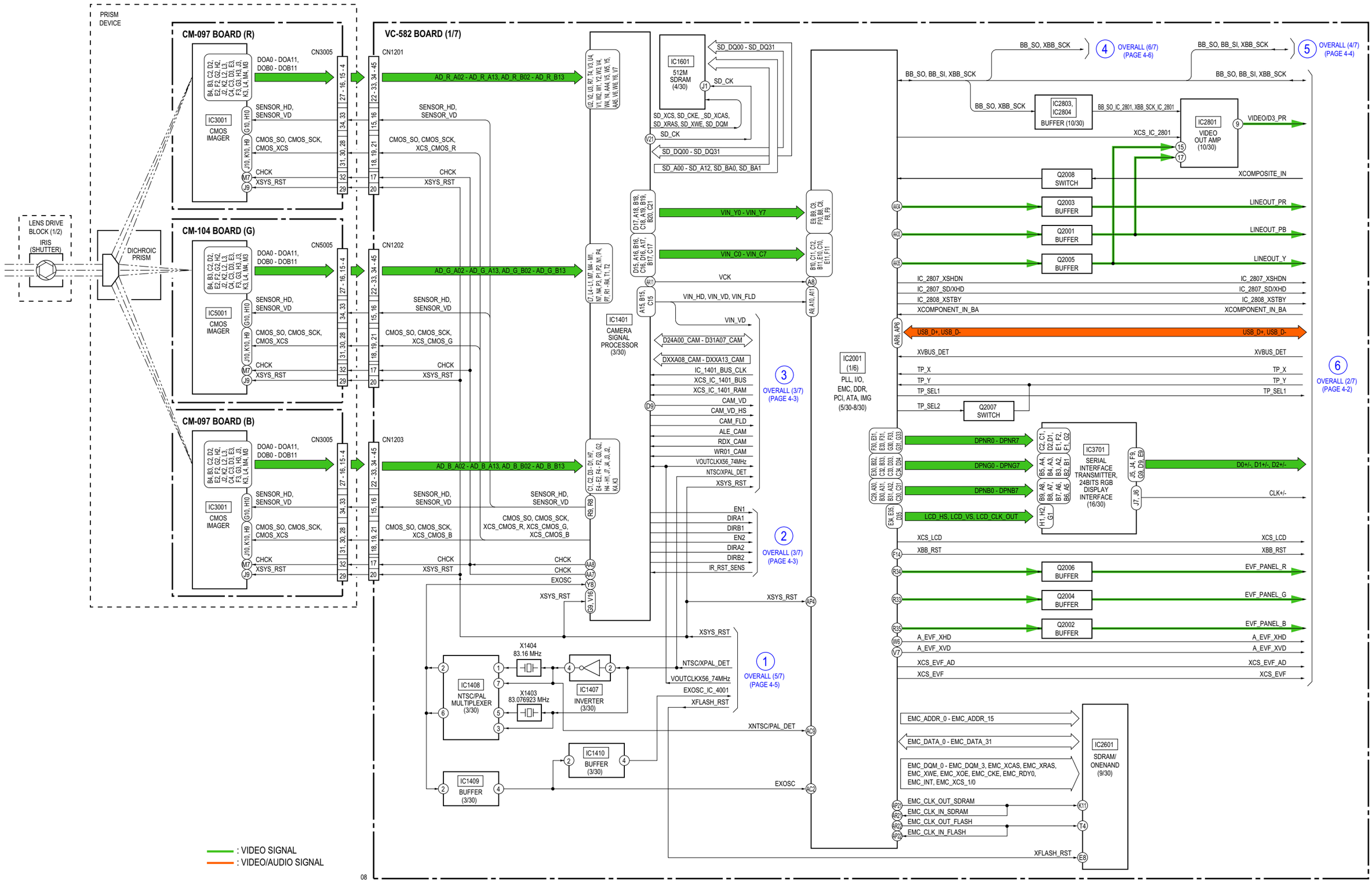

Ver. 1.1 2010.01
The changed portions from
Ver. 1.0 are shown in blue.

4-2. OVERALL BLOCK DIAGRAM (2/7)

( ) : Number in parenthesis ( ) indicates the division number of schematic diagram where the component is located.

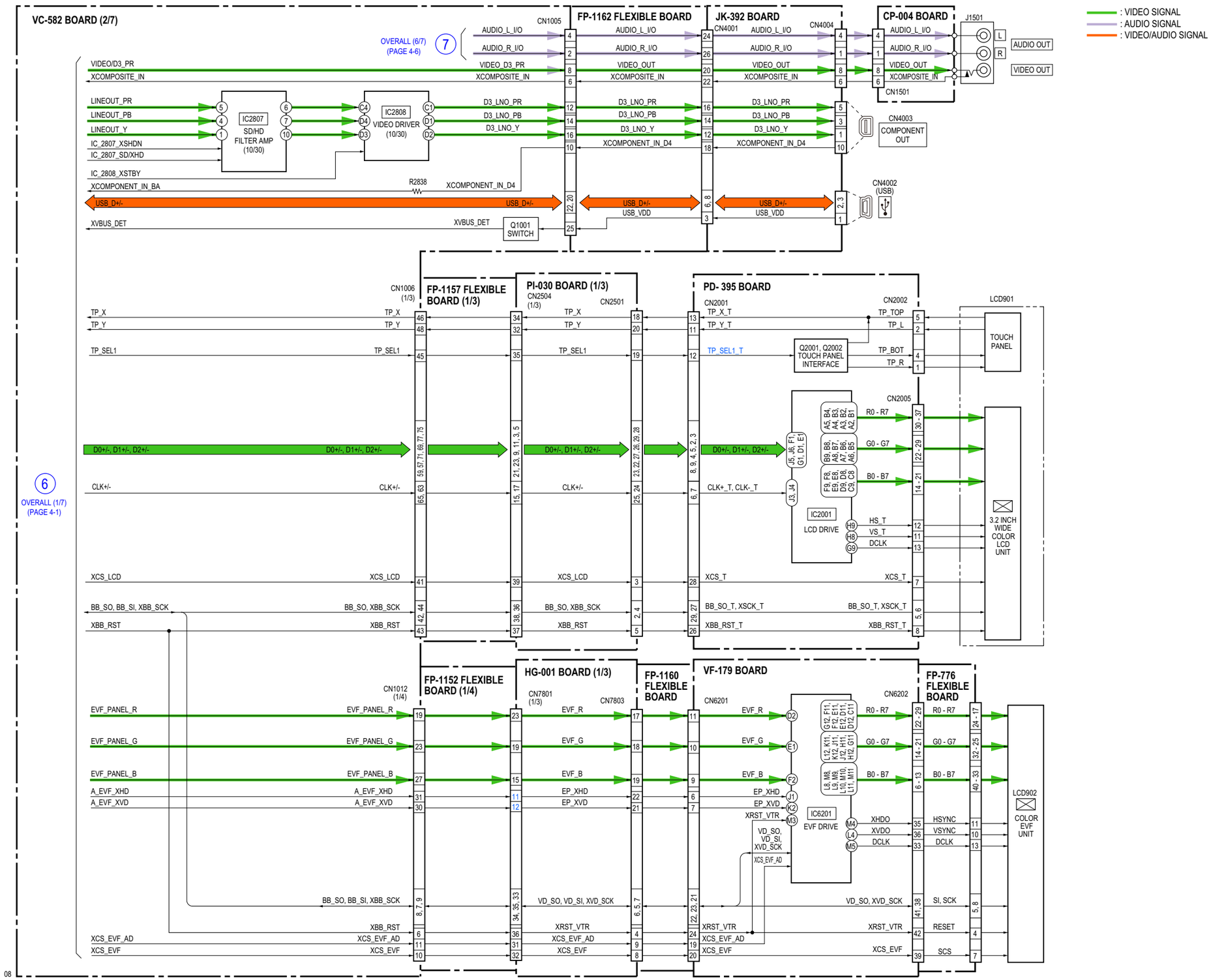

4-3. OVERALL BLOCK DIAGRAM (3/7)

( ) : Number in parenthesis ( ) indicates the division number of schematic diagram where the component is located.

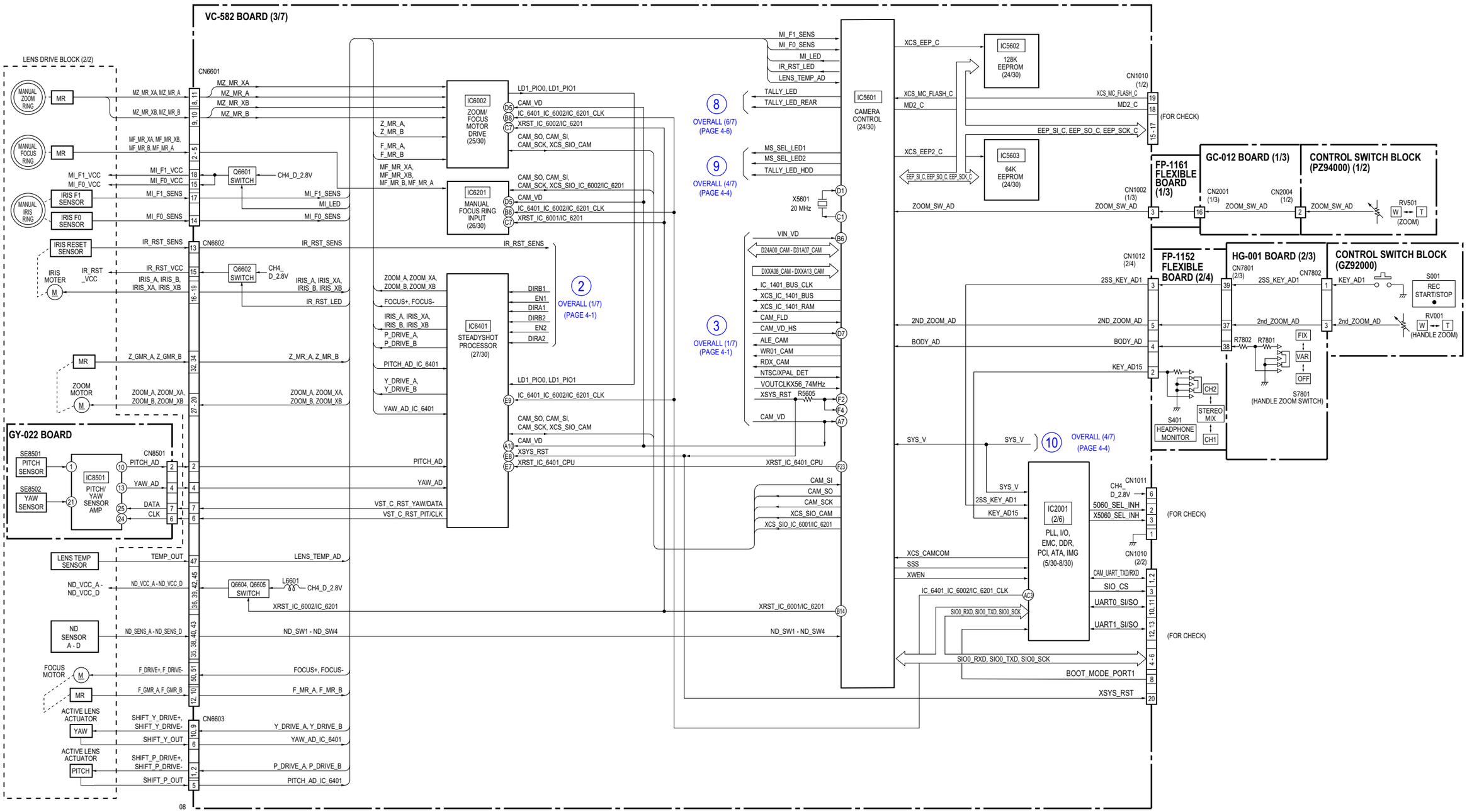

4-4. OVERALL BLOCK DIAGRAM (4/7)

( ) : Number in parenthesis ( ) indicates the division number of schematic diagram where the component is located.

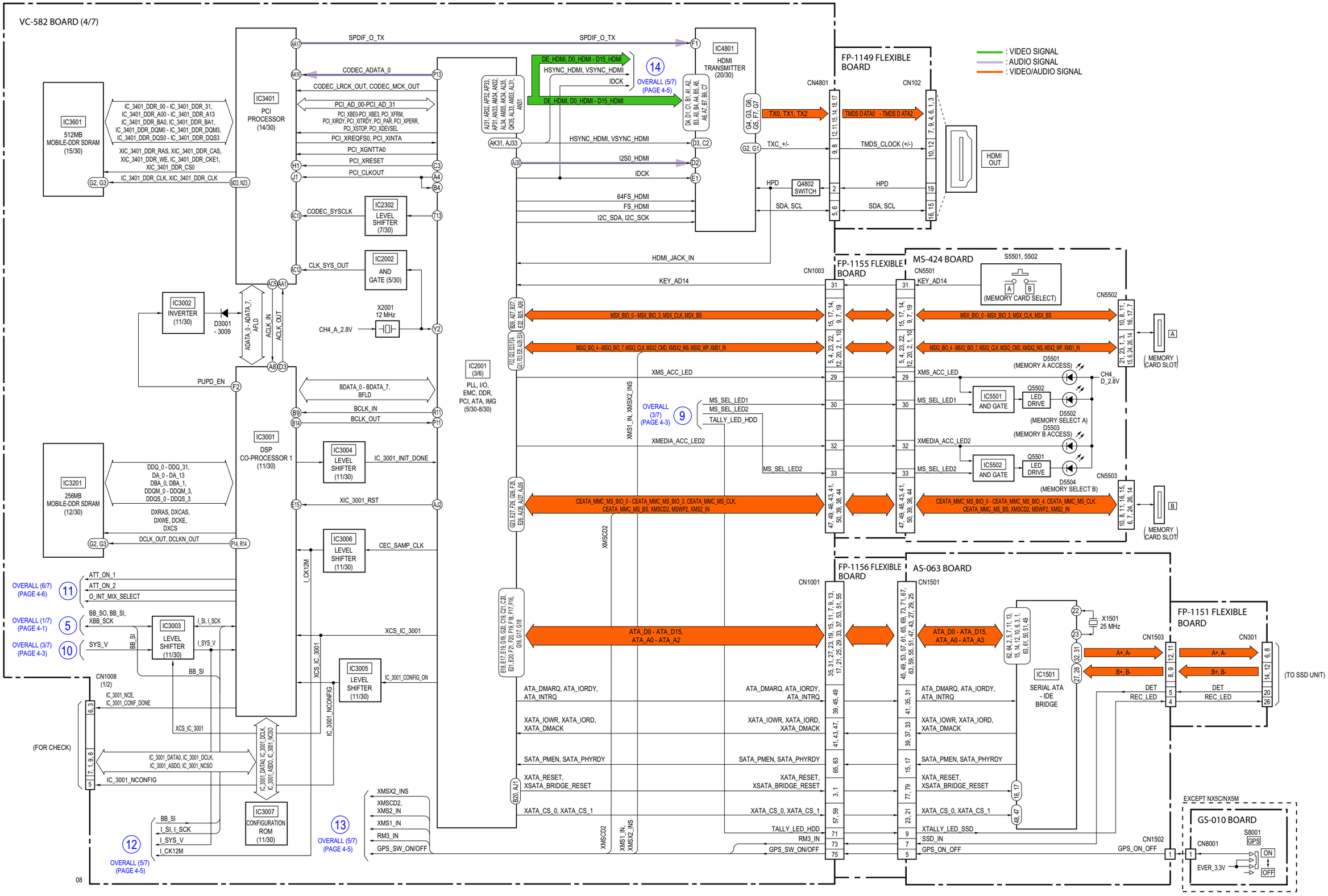

Ver. 1.1 2010.01
The changed portions from
Ver. 1.0 are shown in blue.

4-5. OVERALL BLOCK DIAGRAM (5/7)

( ) : Number in parenthesis ( ) indicates the division number of schematic diagram where the component is located.

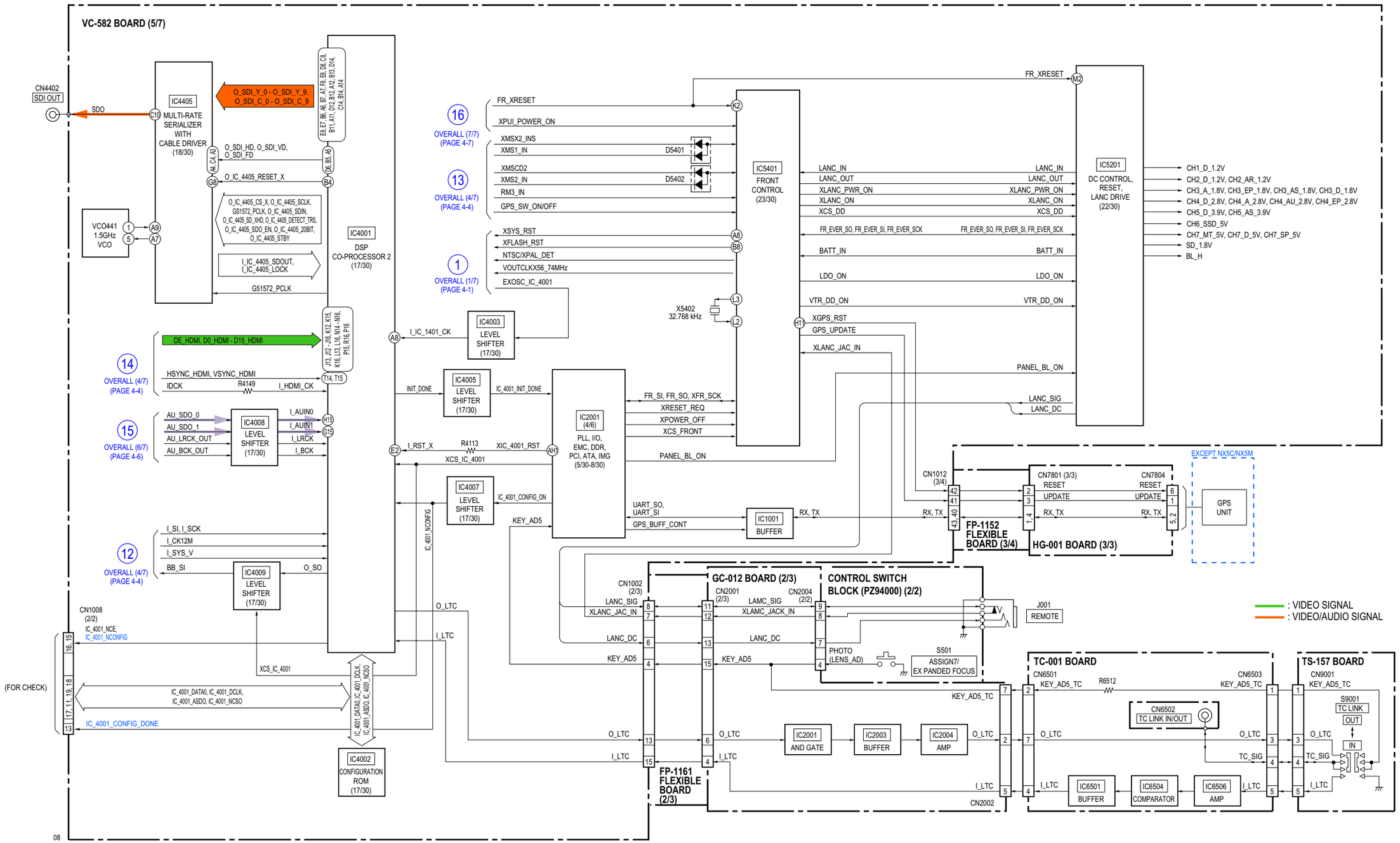

4-6. OVERALL BLOCK DIAGRAM (6/7)

( ) : Number in parenthesis ( ) indicates the division number of schematic diagram where the component is located.

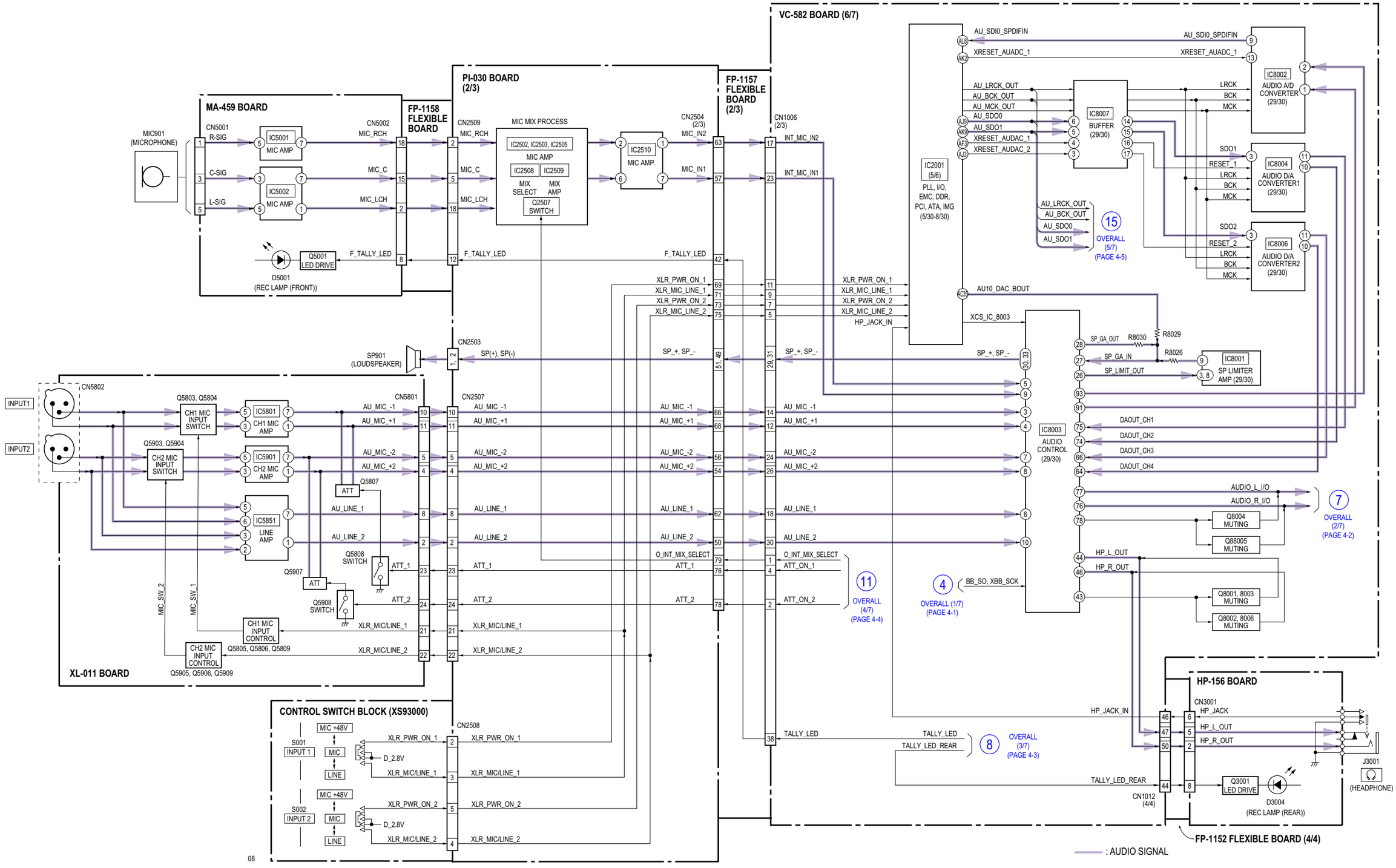

Ver. 1.1 2010.01
The changed portions from
Ver. 1.0 are shown in blue.

4-7. OVERALL BLOCK DIAGRAM (7/7)

( ) : Number in parenthesis ( ) indicates the division number of schematic diagram where the component is located.

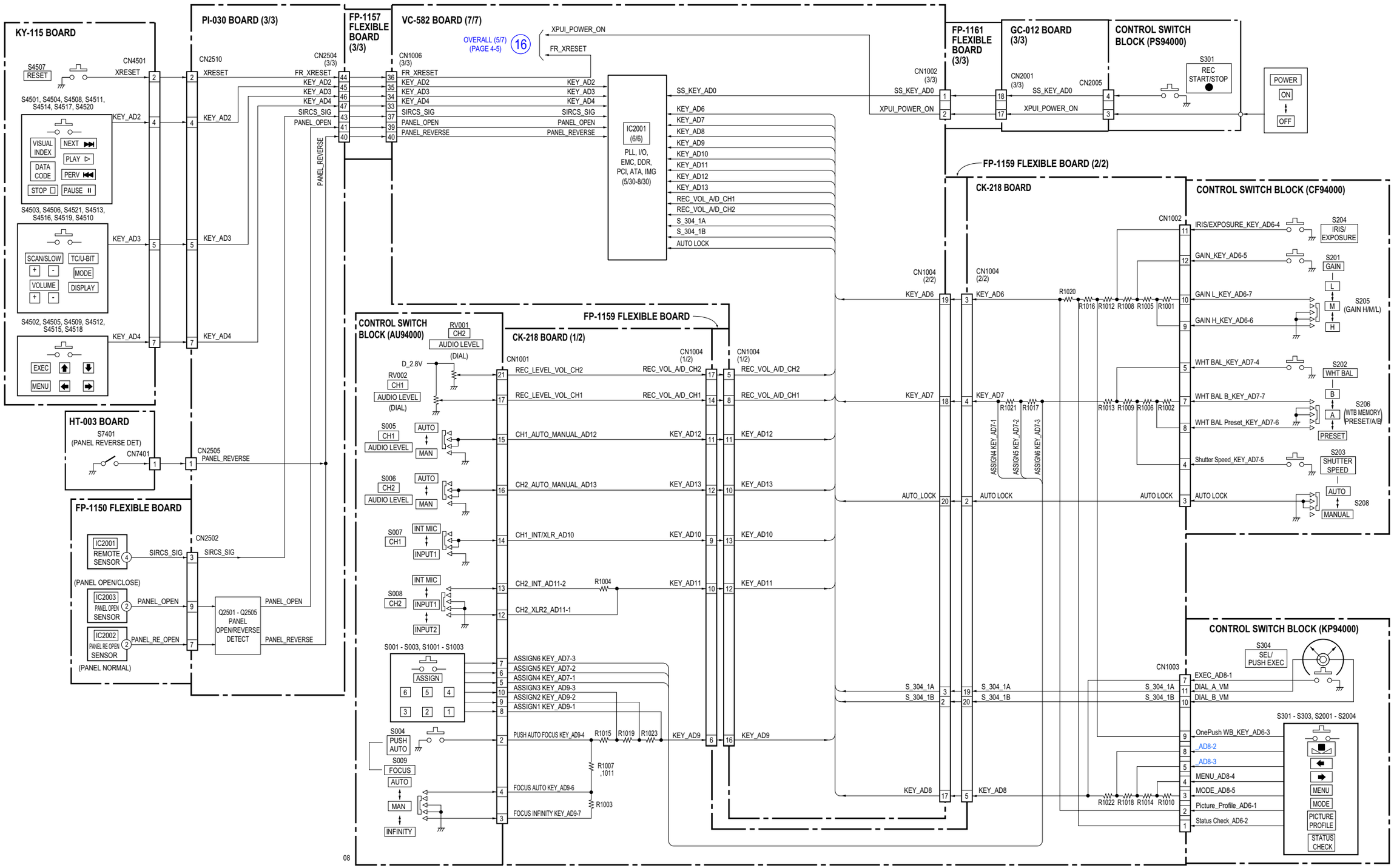

4-8. POWER BLOCK DIAGRAM (1/4)

( ) : Number in parenthesis ( ) indicates the division number of schematic diagram where the component is located.

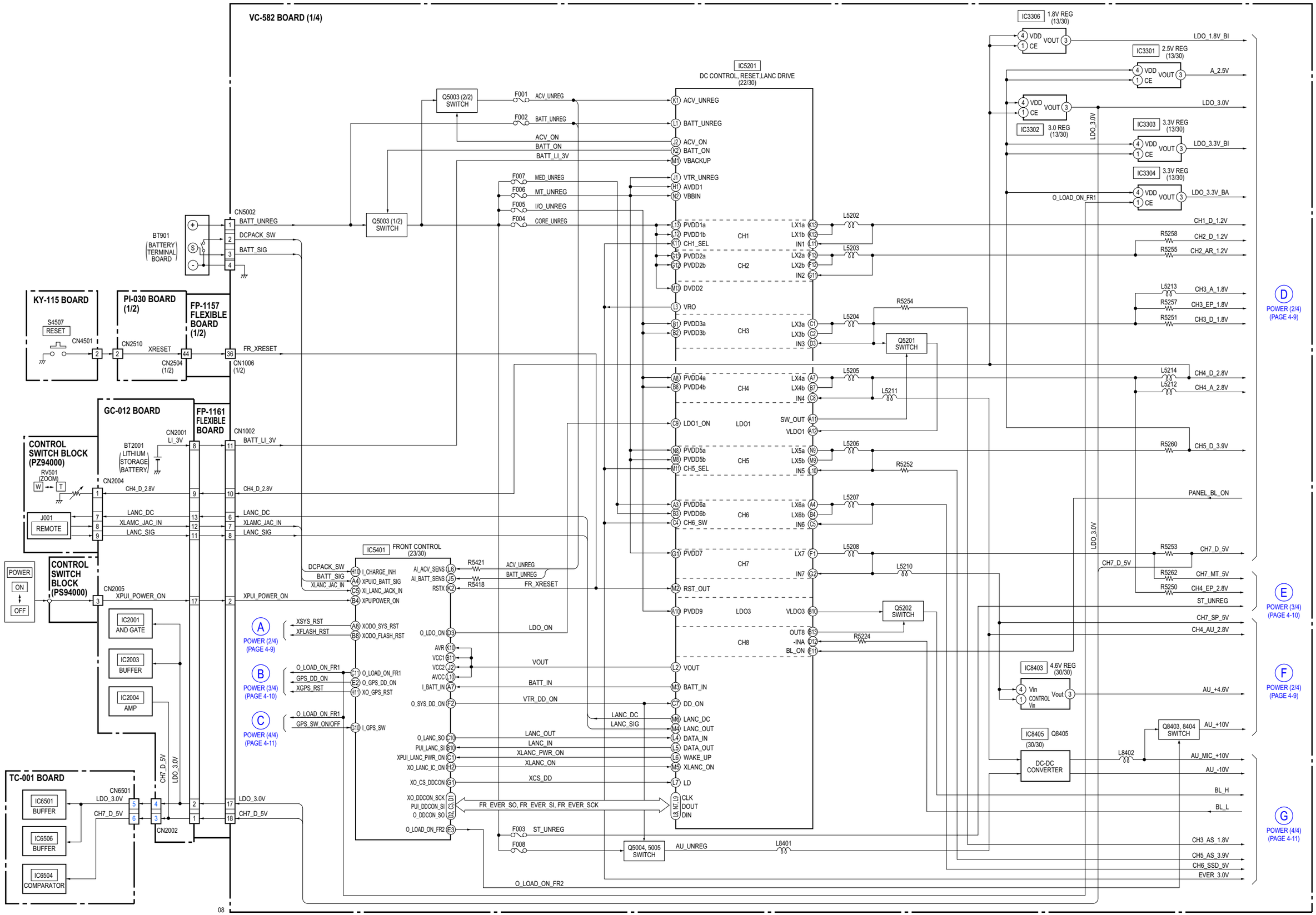

4-9. POWER BLOCK DIAGRAM (2/4)

( ) : Number in parenthesis ( ) indicates the division number of schematic diagram where the component is located.

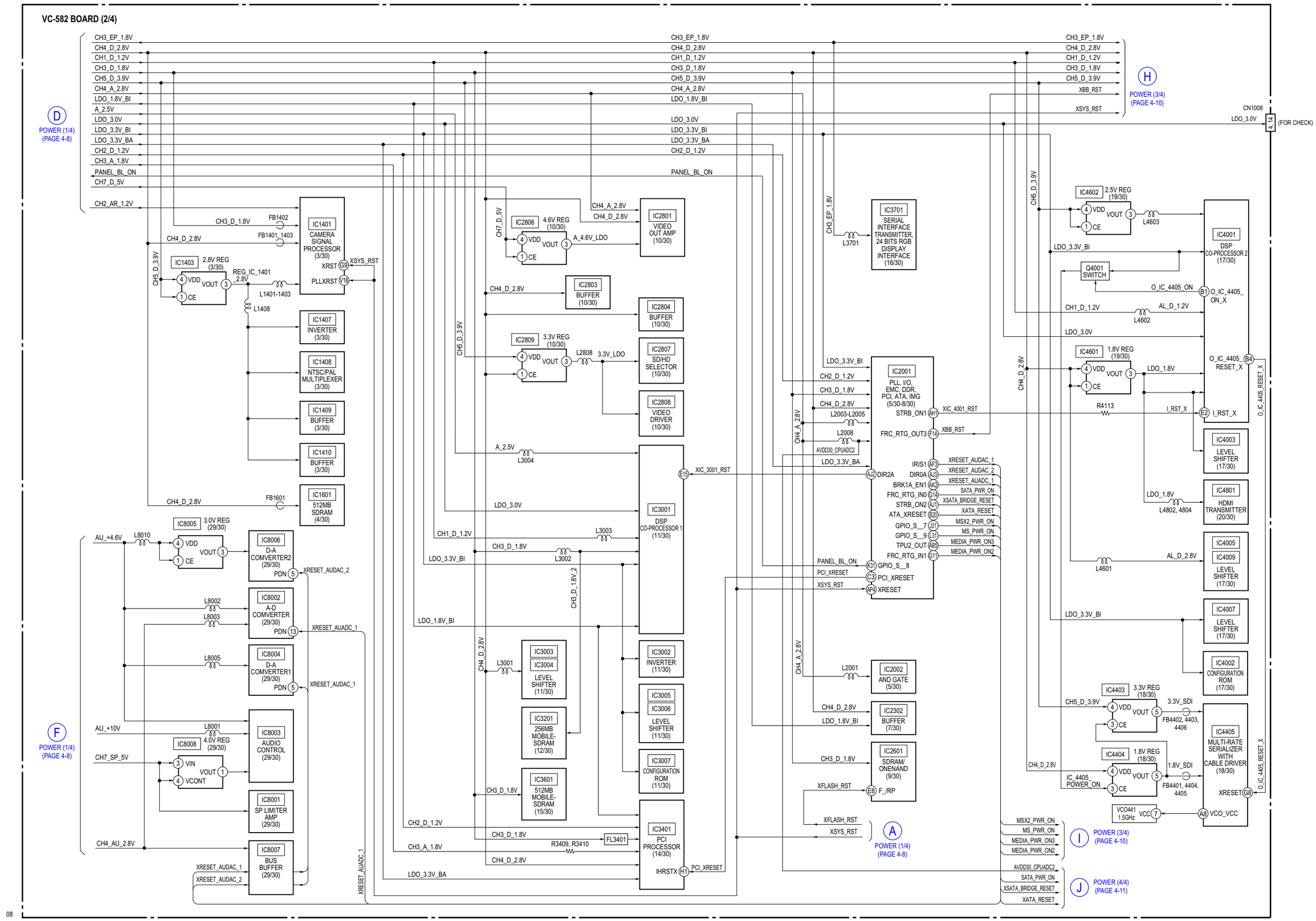

4-10. POWER BLOCK DIAGRAM (3/4)

( ) : Number in parenthesis ( ) indicates the division number of schematic diagram where the component is located.

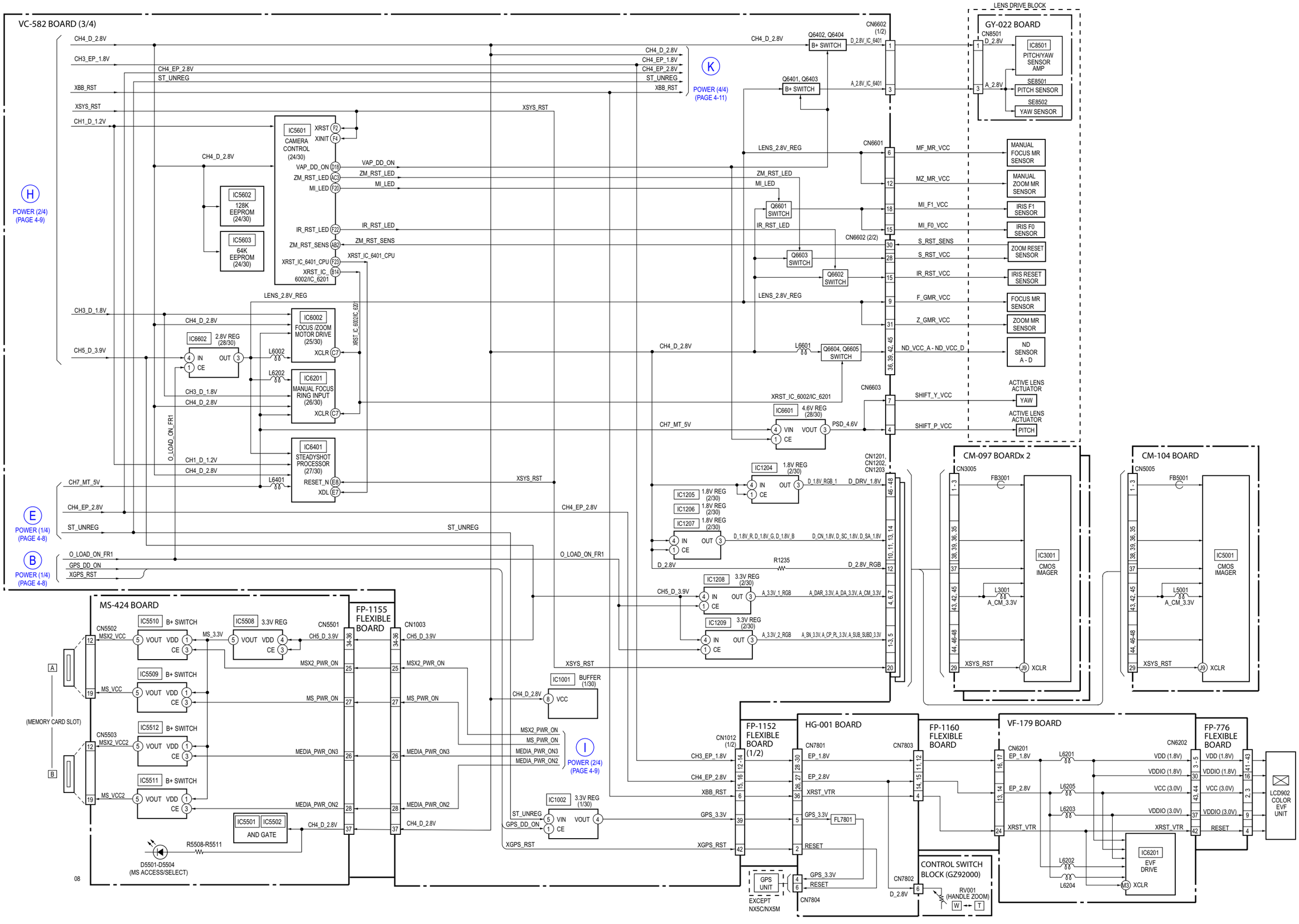

Ver. 1.1 2010.01
The changed portions from
Ver. 1.0 are shown in blue.

4-11. POWER BLOCK DIAGRAM (4/4)

( ) : Number in parenthesis ( ) indicates the division number of schematic diagram where the component is located.

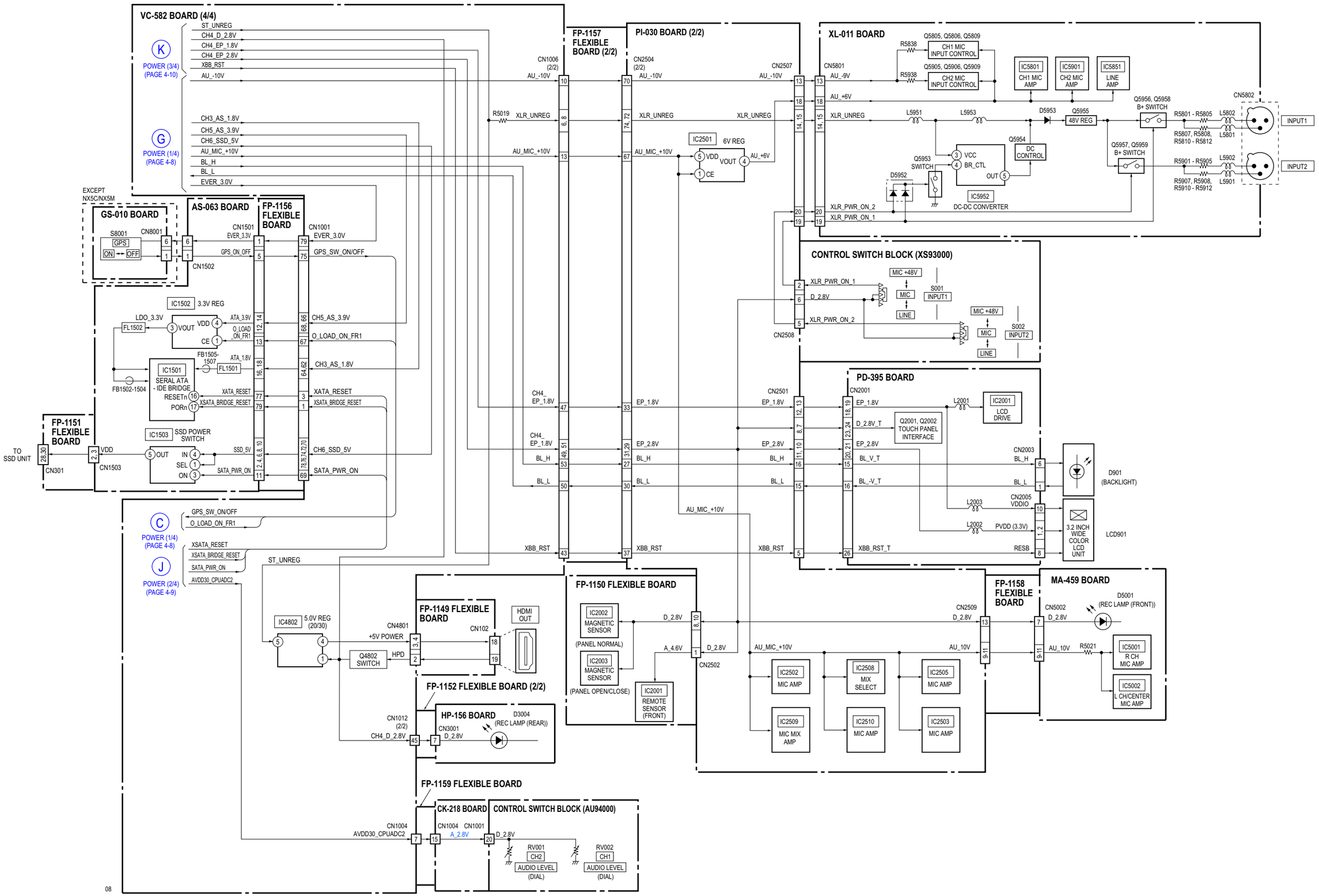

Ver. 1.1 2010.01
The changed portions from
Ver. 1.0 are shown in blue.

5. FRAME SCHEMATIC DIAGRAMS

FRAME SCHEMATIC DIAGRAM (1/2)

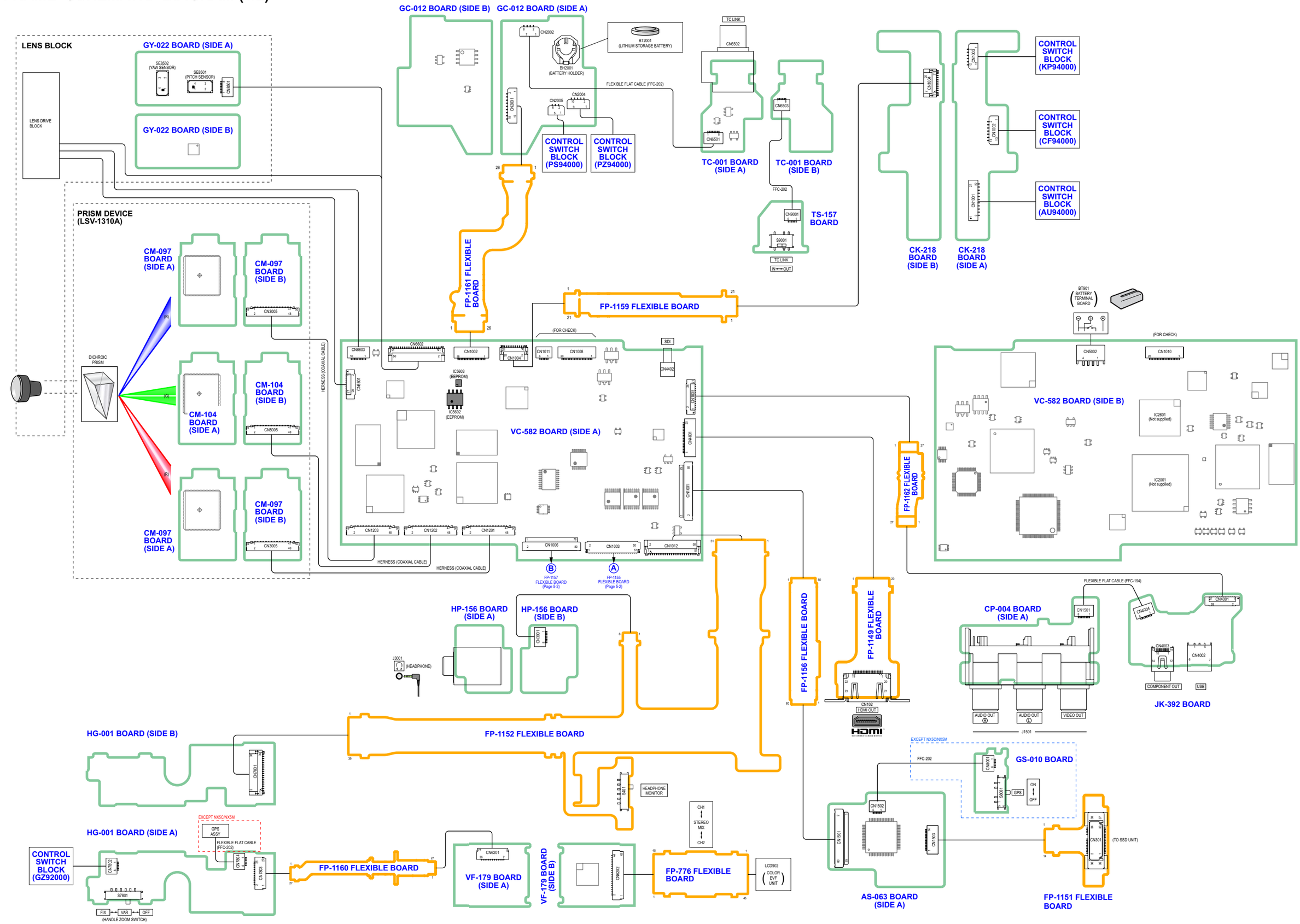

Ver. 1.1 2010.01

The changed portions from
Ver. 1.0 are shown in blue.

FRAME SCHEMATIC DIAGRAM (2/2)

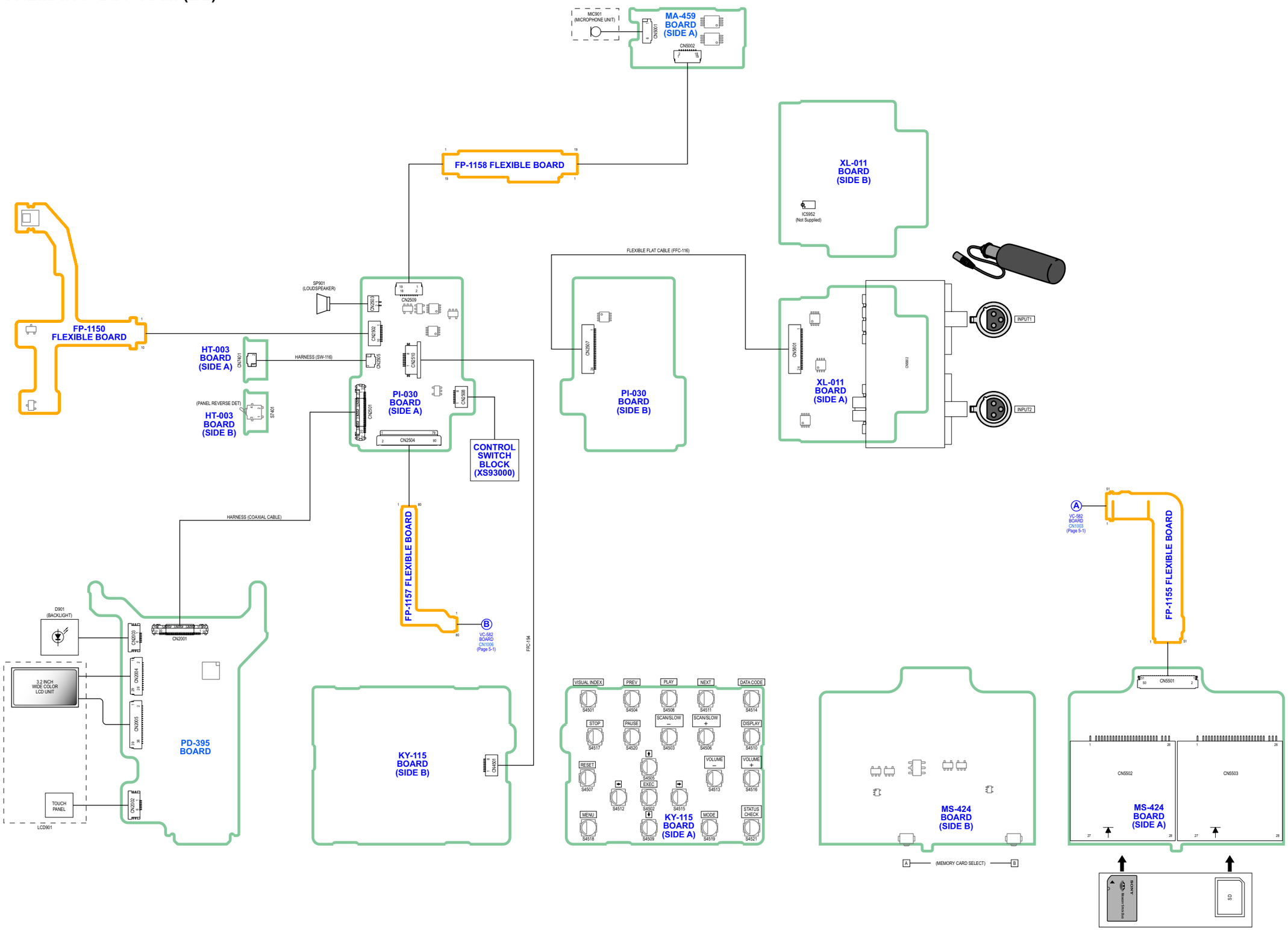

6. SCHEMATIC DIAGRAMS AND PRINTED WIRING BOARDS

– ENGLISH –

THIS NOTE IS COMMON FOR SCHEMATIC DIAGRAMS AND PRINTED WIRING BOARDS.
(In addition to this, the necessary note is printed in each block.)

For Schematic Diagrams

- All capacitors are in μF unless otherwise noted. pF : μμF. 50 V or less are not indicated except for electrolytics and tantalums.
- Chip resistors are 1/10 W unless otherwise noted. kΩ=1000 Ω, MΩ=1000 kΩ.
- Caution when replacing chip parts.
  New parts must be attached after removal of chip.
  Be careful not to heat the minus side of tantalum capacitor, Because it is damaged by the heat.
- Some chip part will be indicated as follows.
  Example C541 L452
  22U 10UH
  TA A 2520
  Kinds of capacitor / Case size — External dimensions (mm)
- Constants of resistors, capacitors, ICs and etc with XX indicate that they are not used.
  In such cases, the unused circuits may be indicated.
- Parts with ★ differ according to the model/destination.
  Refer to the mount table for each function.
- All variable and adjustable resistors have characteristic curve B, unless otherwise noted.
- Signal name
  XEDIT → $\overline{\text{EDIT}}$ PB/XREC → PB/$\overline{\text{REC}}$
- : non flammable resistor
- : fusible resistor
- : panel designation
- : B+ Line
- : B– Line
- : IN/OUT direction of (+, –) B LINE.
- : adjustment for repair.

For Printed Wiring Boards

- : Uses unleaded solder.
- : Circuit board
  : Flexible board
  Pattern from the side which enables seeing.
  : pattern of the rear side
  (The other layers' patterns are not indicated)
- Through hole is omitted.
- There are a few cases that the part printed on diagram isn't mounted in this model.
- : panel designation

- Chip parts.
  Transistor

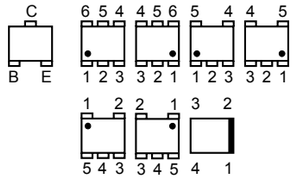

Diode

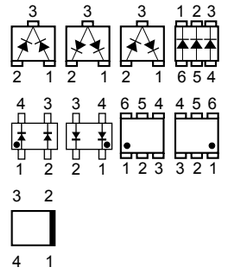

Precautions for Replacement of Imager
- If the imager has been replaced, carry out all the adjustments for the camera section.
- As the imager may be damaged by static electricity from its structure, handle it carefully like for the MOS IC.
  In addition, ensure that the receiver is not covered with dusts nor exposed to strong light.

When indicating parts by reference number, please include the board name.

The components identified by mark ⚠ or dotted line with mark ⚠ are critical for safety.
Replace only with part number specified.

Les composants identifiés par une marque ⚠ sont critiques pour la sécurité.
Ne les remplacer que par une pièce portant le numéro spécifié.

– JAPANESE –

回路図，プリント図共通ノート
（他に必要なノートは各セクションに記載しています）

回路図ノート

- ケミコン，タンタルを除くコンデンサで，耐圧50V以下のものはその耐圧を省略。単位はすべてμF（pはpF）。
- チップ抵抗で指示のないものは，1/10W以下。
  kΩ＝1000Ω，MΩ＝1000kΩ
- チップ部品交換時の注意
  取り外した部品は再使用せず，未使用の部品をご使用ください。
  タンタルコンデンサのマイナス側は熱に弱いため注意してください。
- チップ部品には下記のように表示したものがあります。
  例 C541 L452
  22U 10UH
  TA A 2520
  種類 / ケースサイズ — 外形寸法（mm）
- 抵抗，コンデンサ，ICなど定数にXXがあるものは，使用していない事を示しています。このため，使用していない回路が記載されている事があります。
- ★印のある部品は，機種などにより異なりますので機能別マウント一覧表を参照してください。
- 可変抵抗と半固定抵抗で，B特性の表示を省略。
- 信号名表記について，下記のような場合があります。
  XEDIT → $\overline{\text{EDIT}}$ PB/XREC → PB/$\overline{\text{REC}}$
- は不燃性抵抗。
- はヒューズ抵抗。
- はパネル表示名称。
- はB＋ライン。
- はB－ライン。
- はBライン（＋，－）の入出力方向を示す。
- は調整名称。

プリント図ノート

- ：無鉛半田を使用しています。
- ：基板
  ：フレキシブル配線板
  見ている面側のパターン。
  ：裏側のパターン
  （他のパターンについては表示されていません）
- スルーホールは省略。
- プリント図には，本機で使用していない部品が記載されている場合があります。
- はパネル表示名称。

- Chip parts.
  Transistor

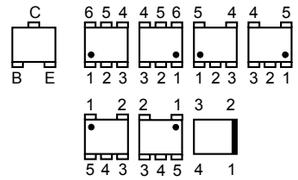

Diode

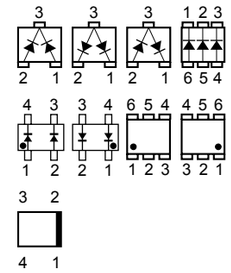

イメージャ交換時の注意
- イメージャを交換した場合は，カメラ部の全調整を行ってください。
- イメージャは構造上，静電気により破壊される恐れがあるため，MOS ICと同様に注意して取り扱ってください。
  また，受光部にはゴミの付着，および強い光がはいることのないように注意してください。

お願い

図面番号で部品を指定するときは基板名又はブロックを併せて指定してください。

⚠印の部品，または⚠印付の点線で囲まれた部品は，安全性を維持するために，重要な部品です。
従って交換時は，必ず指定の部品を使用してください。

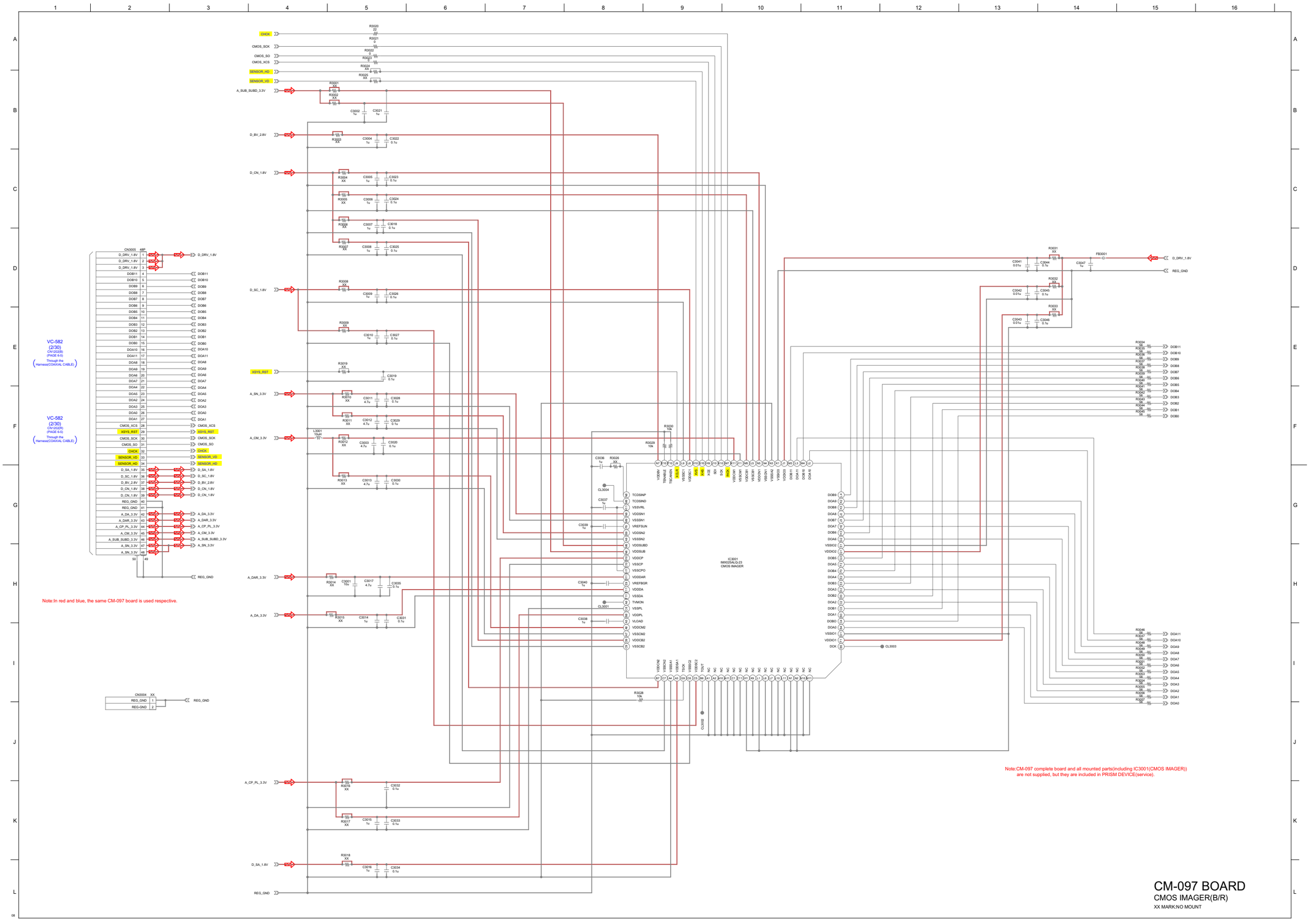
CM-097 BOARD
CMOS IMAGER(B/R)
XX MARK:NO MOUNT
Note:In red and blue, the same CM-097 board is used respective.
Note:CM-097 complete board and all mounted parts(including IC3001(CMOS IMAGER)) are not supplied, but they are included in PRISM DEVICE(service).
IC3001 IMX235ALQ-23 CMOS IMAGER
VC-582 (2/30) CN12G(B) (PAGE 6-5) Through the Harness(COAXIAL CABLE)
VC-582 (2/30) CN12G(R) (PAGE 6-5) Through the Harness(COAXIAL CABLE)
CN3005 48P
CN2004 XX
CHCK
CMOS_SCK
CMOS_SO
CMOS_XCS
SENSOR_HD
SENSOR_VD
XSYS_RST
D_DRV_1.8V
D_BV_2.8V
D_CN_1.8V
D_SC_1.8V
D_SA_1.8V
A_SUB_SUBD_3.3V
A_SN_3.3V
A_CM_3.3V
A_CP_PL_3.3V
A_DAR_3.3V
A_DA_3.3V
REG_GND

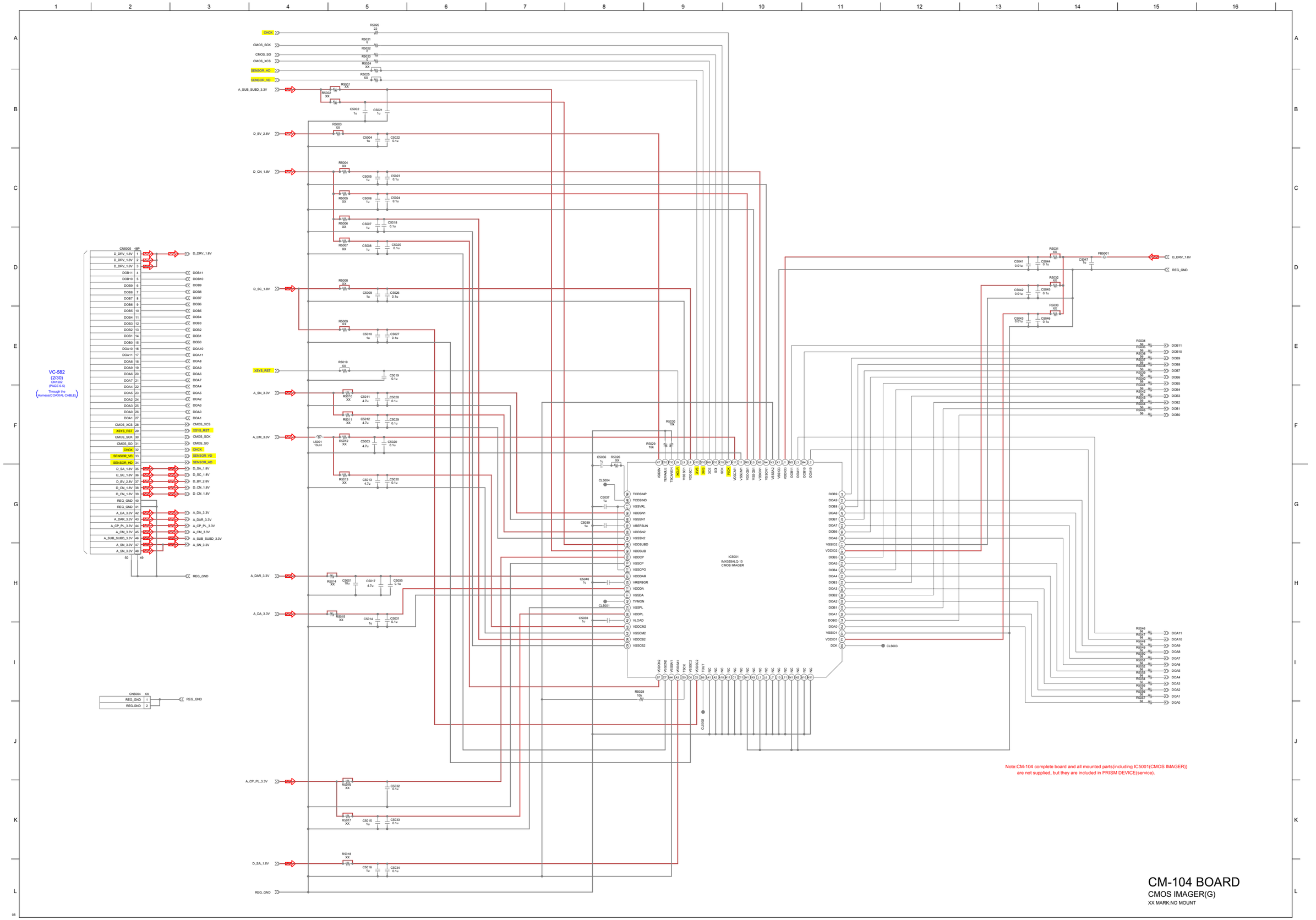
VC-582
(2/30)
CN1202
(PAGE 6-5)
Through the Harness(COAXIAL CABLE)
CN5005 48P
CN5004 XX
IC5001
IMX025ALQ-13
CMOS IMAGER
Note:CM-104 complete board and all mounted parts(including IC5001(CMOS IMAGER)) are not supplied, but they are included in PRISM DEVICE(service).
CM-104 BOARD
CMOS IMAGER(G)
XX MARK:NO MOUNT

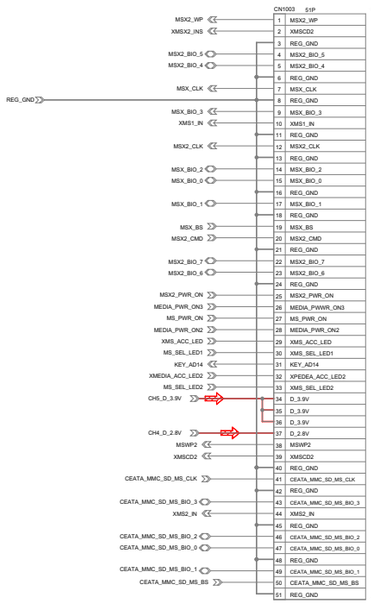

FP-1155
FLEXIBLE
LND152-LND202
(PAGE 6-54)

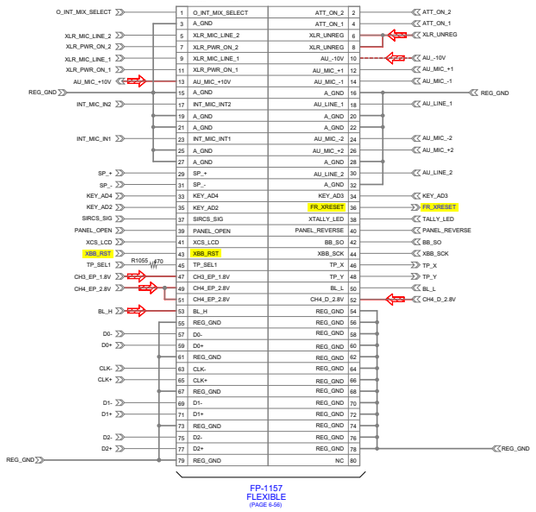

FP-1157
FLEXIBLE
(PAGE 6-56)

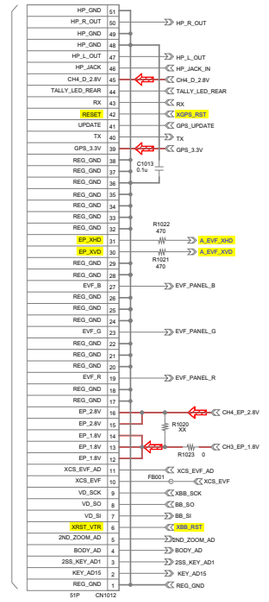

FP-1152
FLEXIBLE
LND492
(PAGE 6-53)

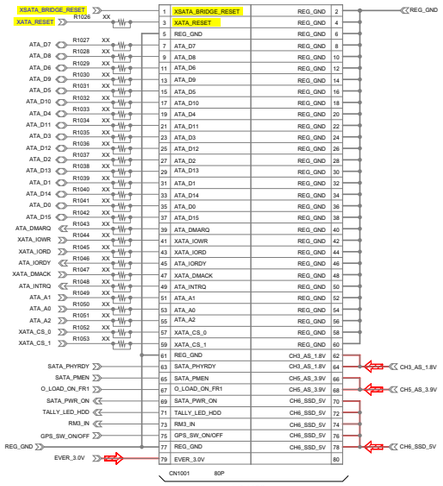

FP-1156
FLEXIBLE
(PAGE 6-55)

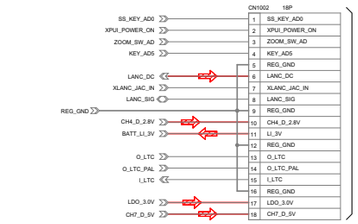

FP-1161
FLEXIBLE
LND001-LND015,
LND018-LND022,
LND024-LND026
(PAGE 6-51)

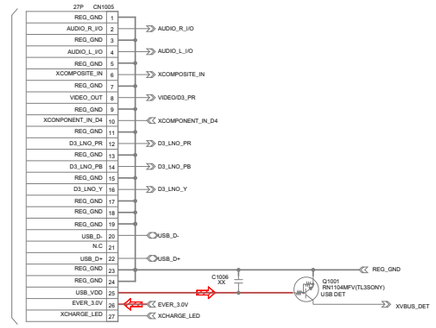

FP-1162
FLEXIBLE
LND053-LND045,
LND052-LND054
(PAGE 6-51)

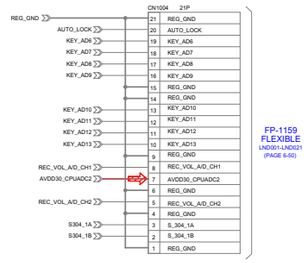

FP-1159
FLEXIBLE
LND001-LND021
(PAGE 6-50)

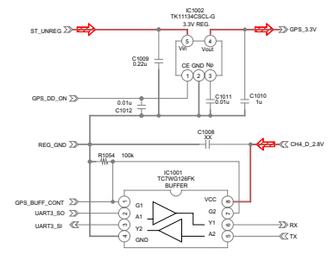

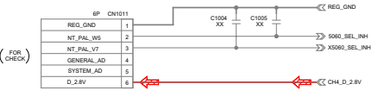

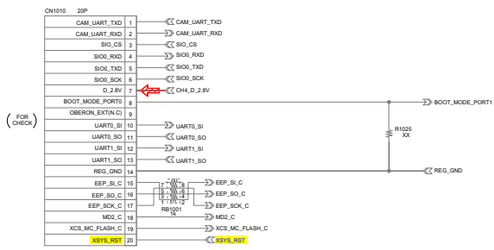

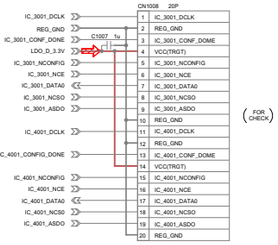

VC-582 BOARD(1/30)

CONNECTORS

XX MARK:NO MOUNT

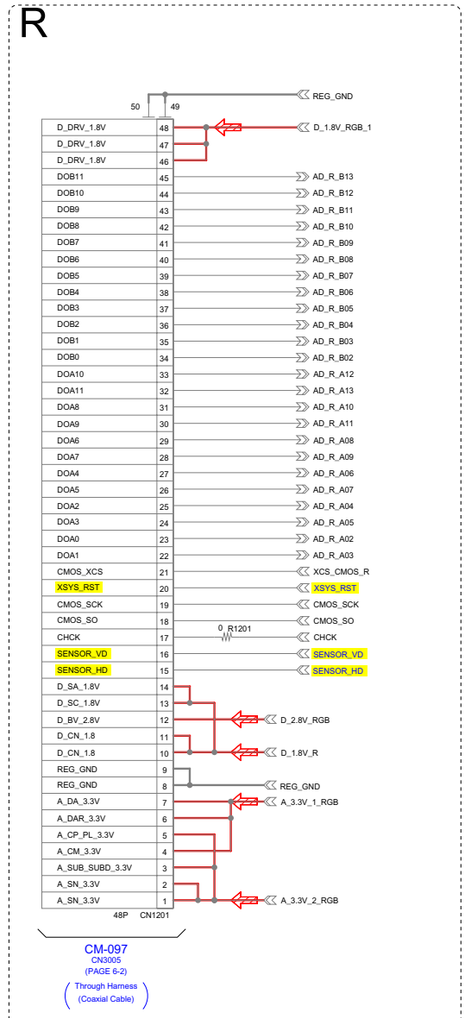

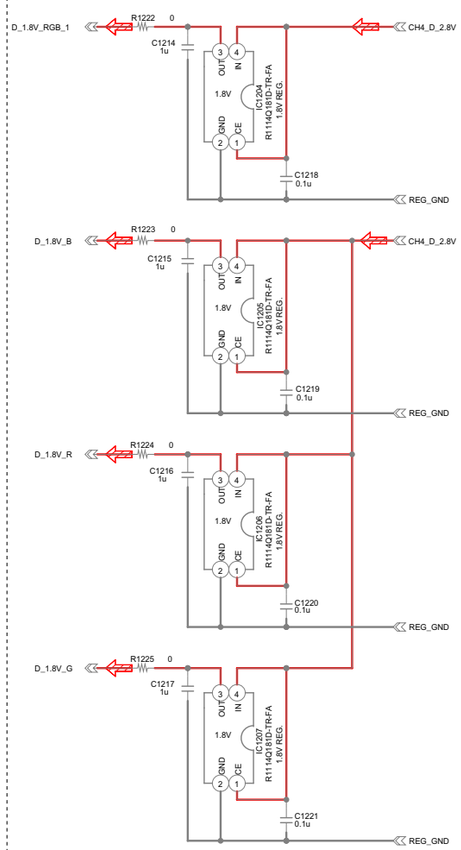

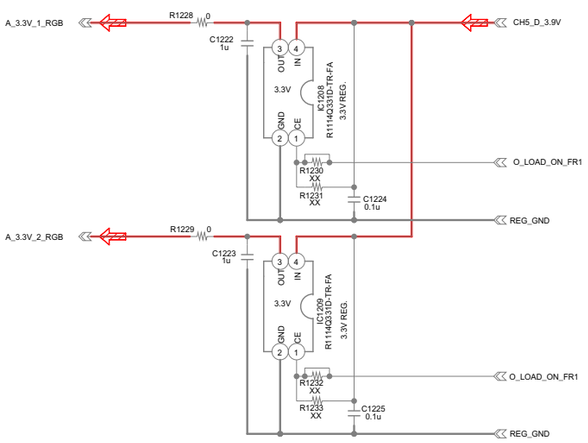

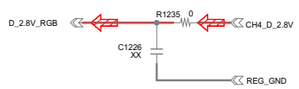

VC-582 BOARD(2/30)

REGULATORS FOR CM BOARDS

XX MARK:NO MOUNT

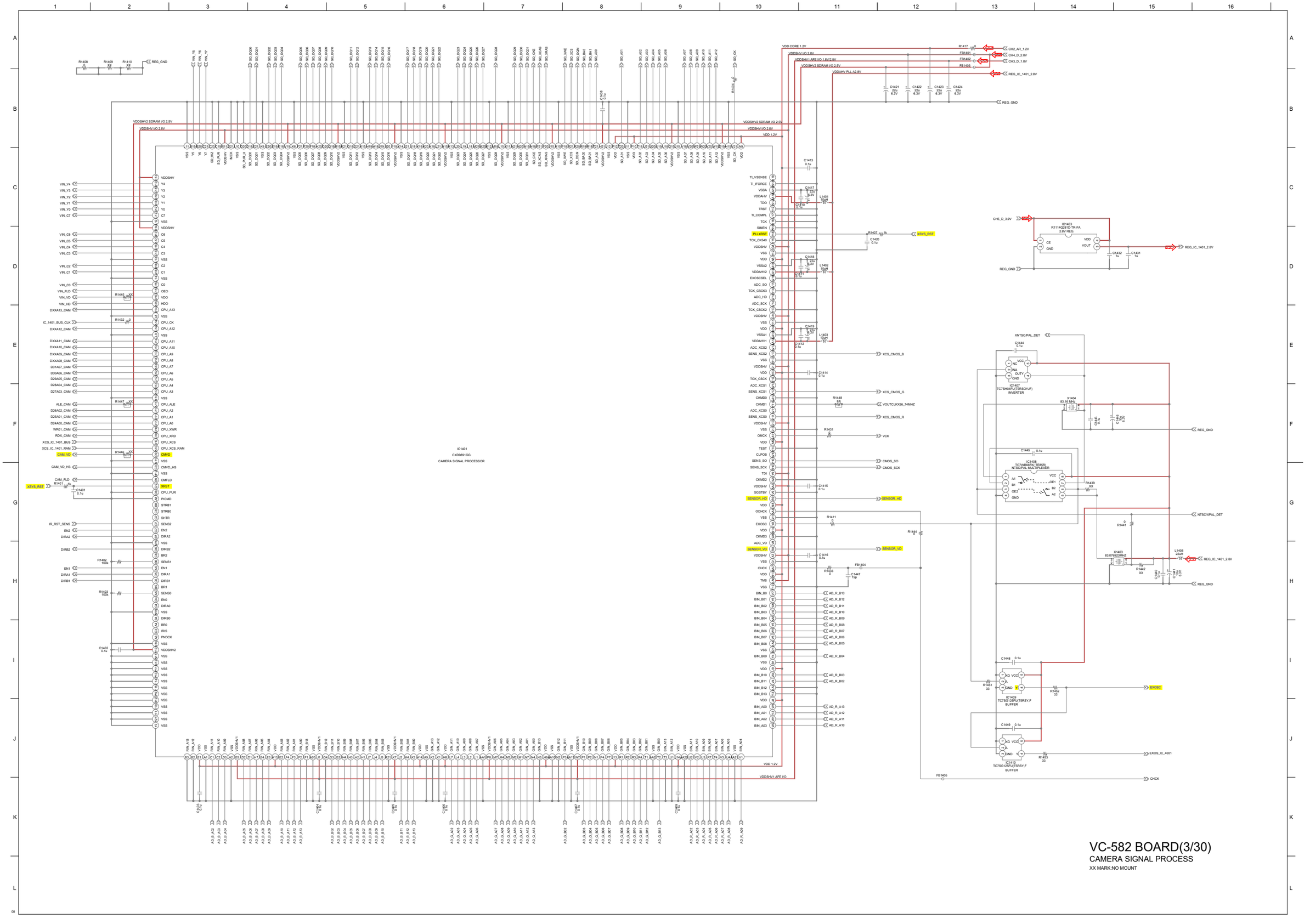
IC1401
CXD8691GG
CAMERA SIGNAL PROCESSOR
VC-582 BOARD(3/30)
CAMERA SIGNAL PROCESS
XX MARK:NO MOUNT

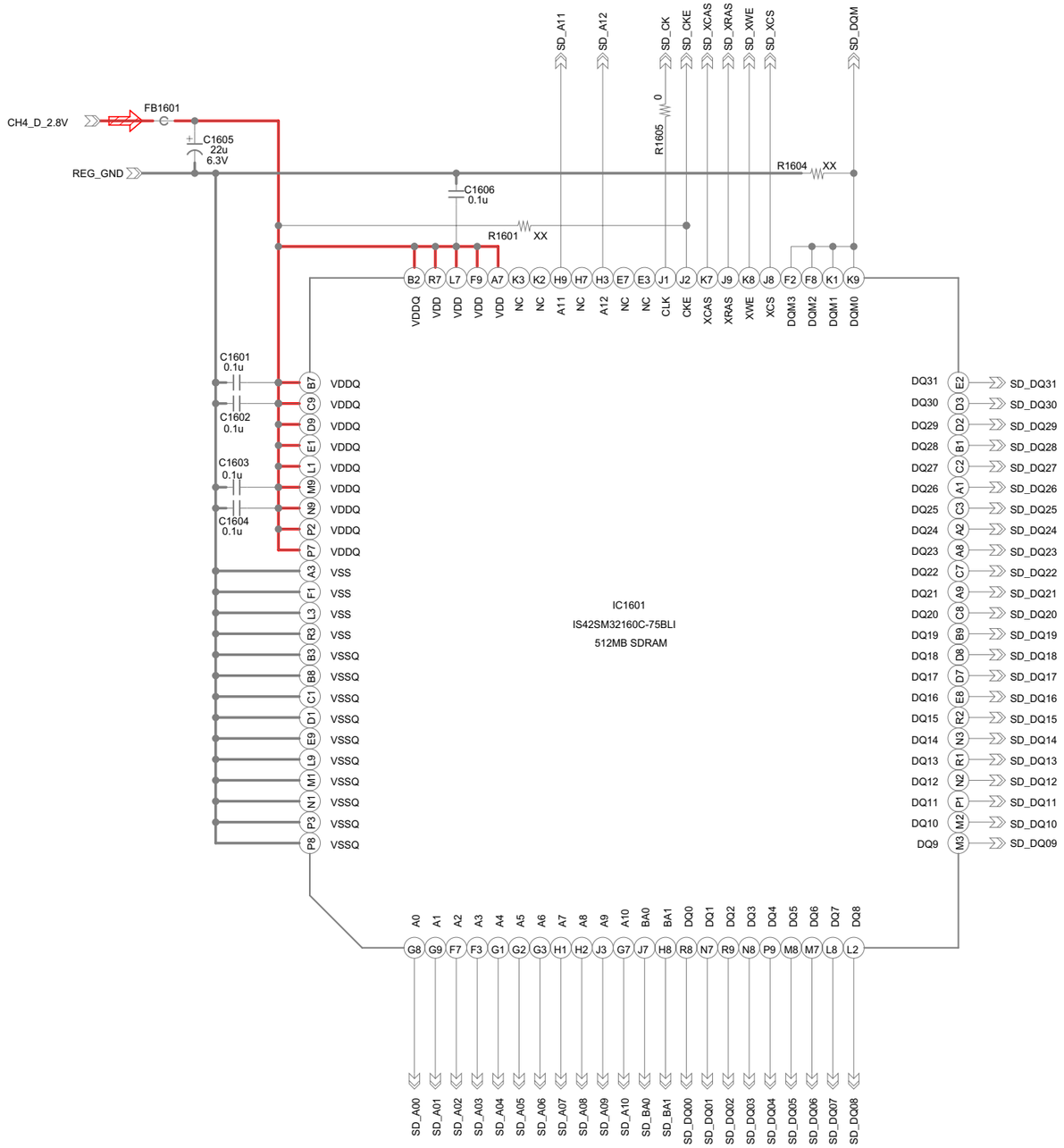

VC-582 BOARD(4/30)

SDRAM FOR IC1401

XX MARK:NO MOUNT

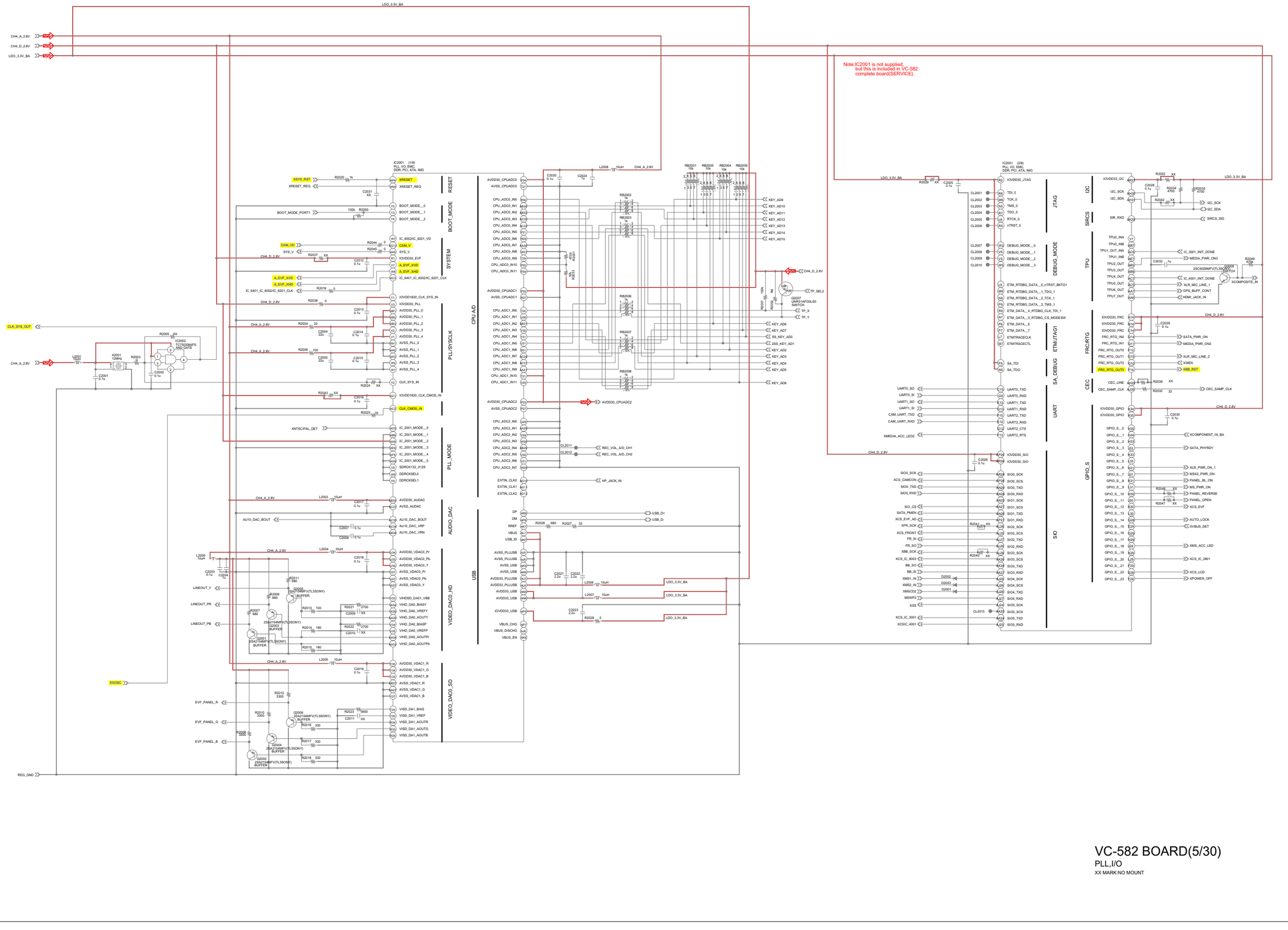
Note:IC2001 is not supplied,
but this is included in VC-582
complete board(SERVICE).
IC2001 (1/8)
PLL, I/O, EMC,
DDR, PCI_ATA, IMG
RESET
BOOT_MODE
SYSTEM
PLL/SYSCLK
PLL_MODE
AUDIO_DAC
VIDEO_DAC0_HD
VIDEO_DAC0_SD
CPU A/D
USB
IC2001 (2/8)
PLL, I/O, EMC,
DDR, PCI_ATA, IMG
JTAG
DEBUG_MODE
ETM/JTAG1
SA_DEBUG
UART
SIO
I2C
SIRCS
TPU
FRC,RTG
CEC
GPIO_S
VC-582 BOARD(5/30)
PLL,I/O
XX MARK:NO MOUNT

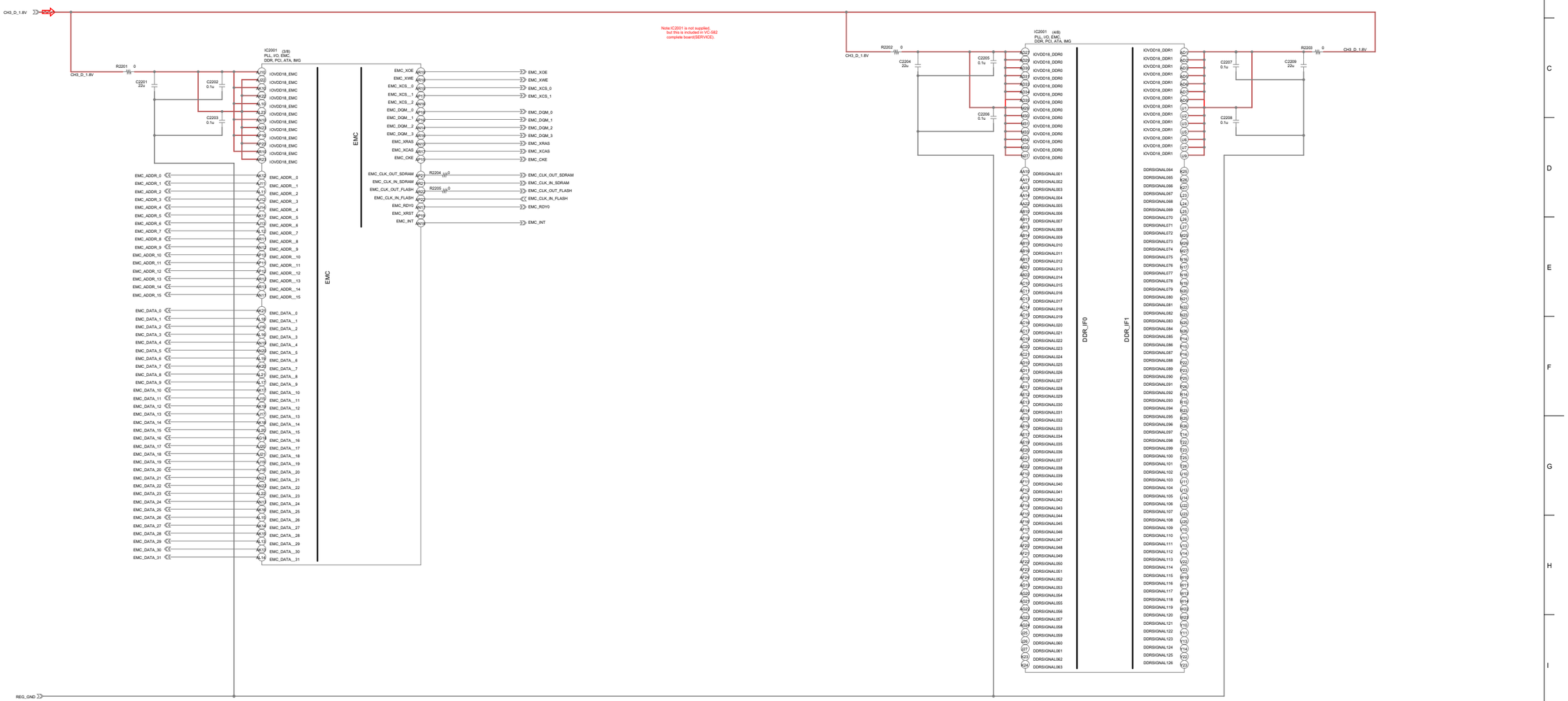

VC-582 BOARD(6/30)

EMC, DDR

XX MARK:NO MOUNT

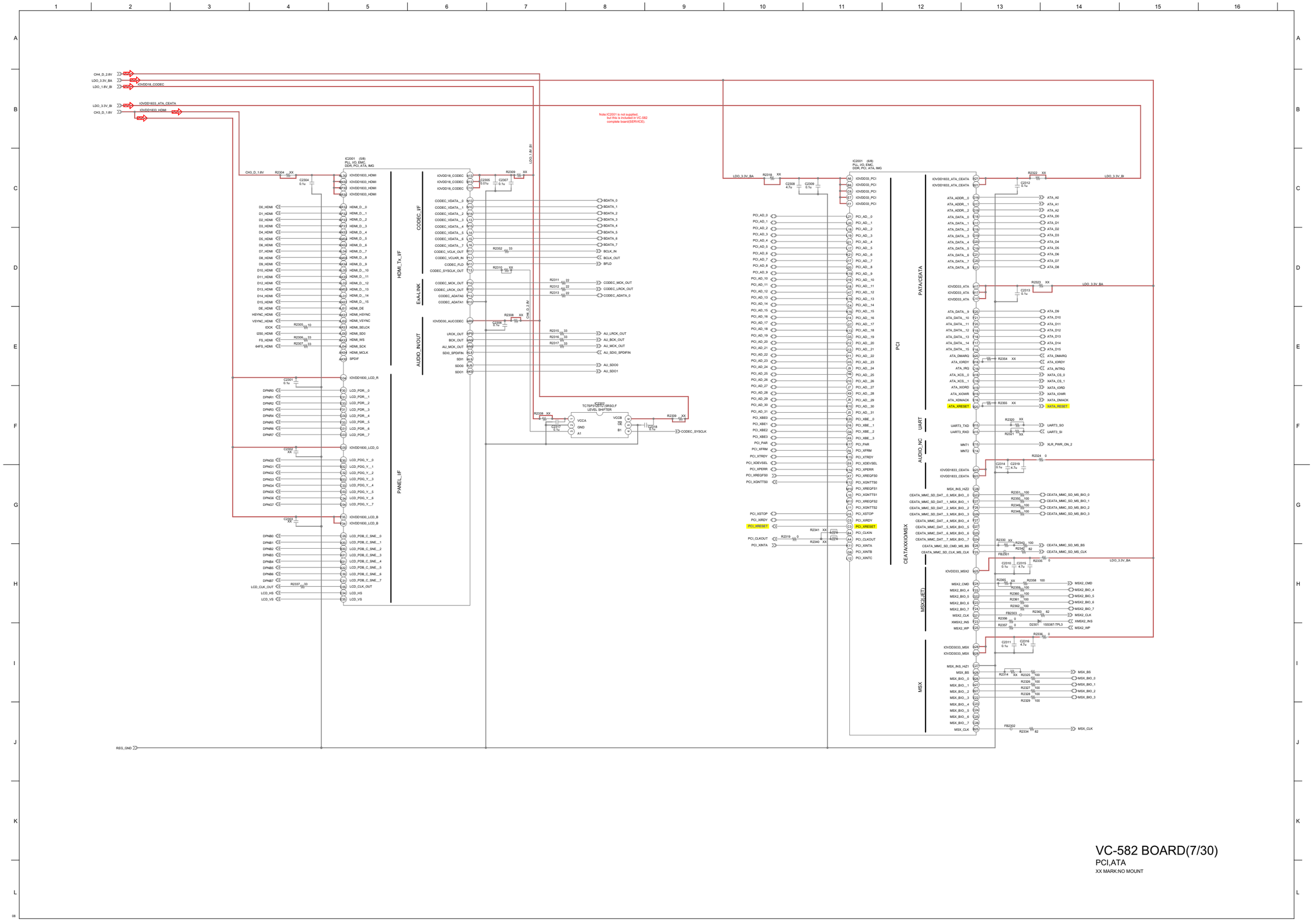

Note:IC2001 is not supplied,
but this is included in VC-582
complete board(SERVICE).
IC2001 (5/8)
PLL, I/O, EMC,
DDR, PCI, ATA, IMG
IC2001 (6/8)
PLL, I/O, EMC,
DDR, PCI, ATA, IMG
HDMI_TX_I/F
CODEC_I/F
EXA-LINK
AUDIO_IN/OUT
PANEL_I/F
PCI
PATA/CEATA
UART
AUDIO_NC
CEATA/XXIO/MSX
MSX2(JET)
MSX
IC2001
TC7SP3125TU/SRSO.F
LEVEL SHIFTER
VC-582 BOARD(7/30)
PCI,ATA
XX MARK:NO MOUNT

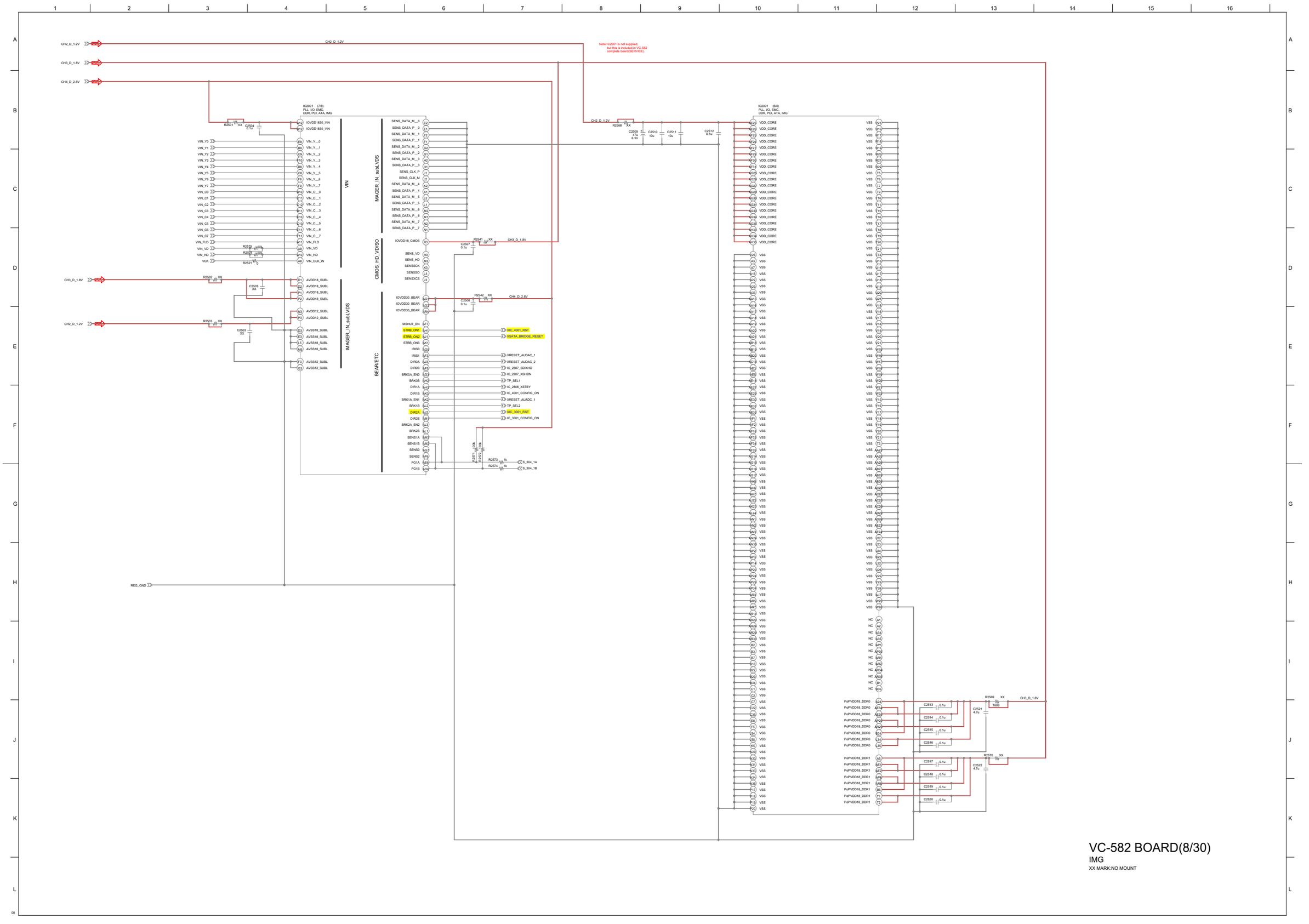
CH2_D_1.2V
CH3_D_1.8V
CH4_D_2.8V
Note:IC2001 is not supplied,
but this is included in VC-582
complete board(SERVICE).
IC2001 (7/8)
PLL, I/O, EMC,
DDR, PCI, ATA, IMG
IC2001 (8/8)
PLL, I/O, EMC,
DDR, PCI, ATA, IMG
VIN
IMAGER_IN_subLVDS
CMOS_HD_VD/SO
IMAGER_IN_subLVDS
BEAR/ETC
REG_GND
IMC_4001_RST
XSATA_BRIDGE_RESET
XRESET_AUDAC_1
XRESET_AUDAC_2
IC_2807_SD/XHD
IC_2807_XSHDN
TP_SEL1
IC_2808_XSTBY
IC_4001_CONFIG_ON
XRESET_AUDAC_1
TP_SEL2
XIC_3001_RST
IC_3001_CONFIG_ON
S_304_1A
S_304_1B
VC-582 BOARD(8/30)
IMG
XX MARK:NO MOUNT

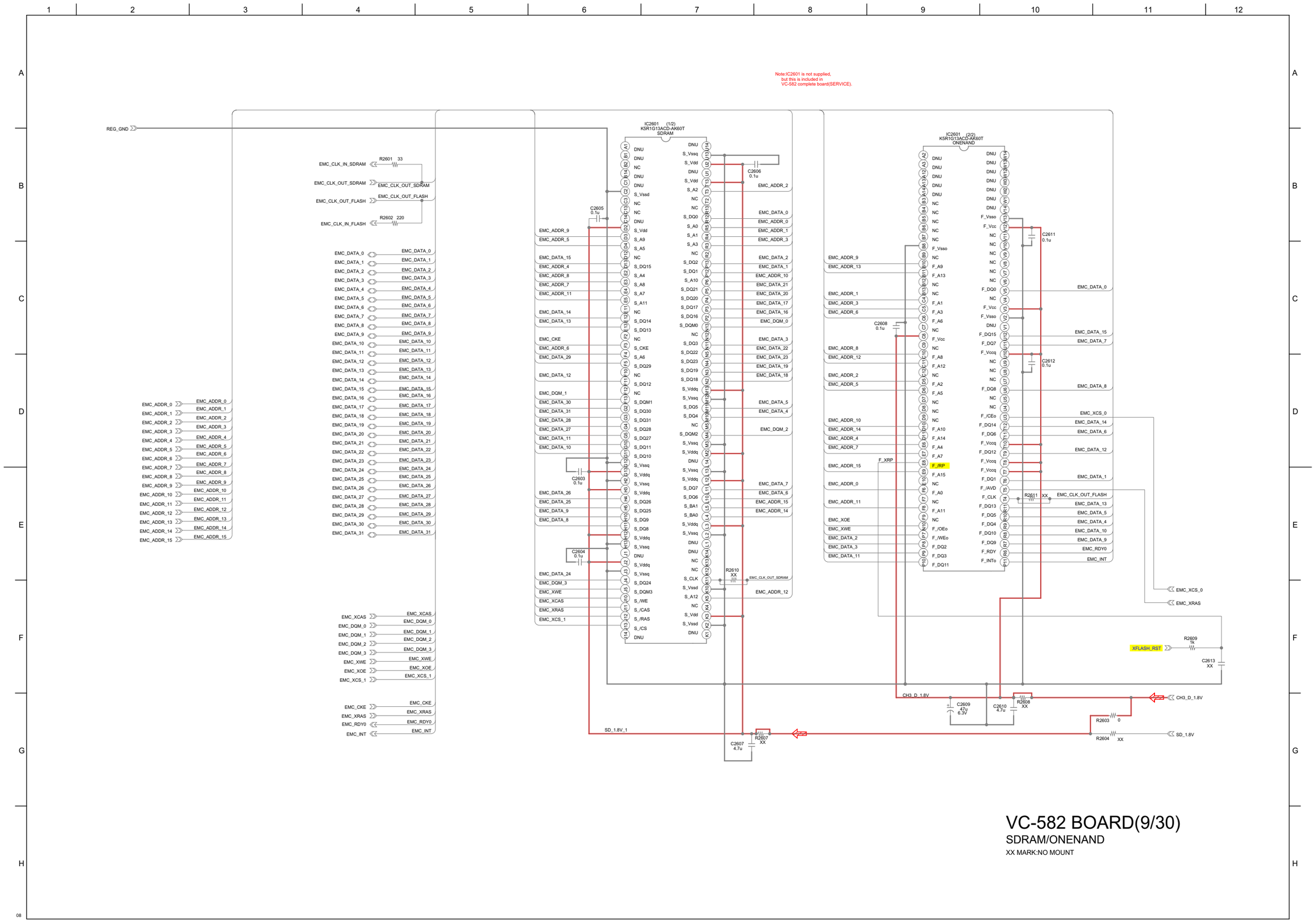
Note:IC2601 is not supplied,
but this is included in
VC-582 complete board(SERVICE).
IC2601 (1/2)
K5R1G13ACD-AK60T
SDRAM
IC2601 (2/2)
K5R1G13ACD-AK60T
ONENAND
REG_GND
R2601 33
EMC_CLK_IN_SDRAM
EMC_CLK_OUT_SDRAM
EMC_CLK_OUT_FLASH
R2602 220
EMC_CLK_IN_FLASH
C2605 0.1u
C2606 0.1u
C2603 0.1u
C2604 0.1u
C2607 4.7u
C2608 0.1u
C2609 47u 6.3V
C2610 4.7u
C2611 0.1u
C2612 0.1u
R2607 XX
R2608 XX
R2610 XX
R2611 XX
R2603 0
R2604 XX
R2609 1k
C2613 XX
F_XRP
XFLASH_RST
CH3_D_1.8V
SD_1.8V_1
SD_1.8V
EMC_CLK_OUT_SDRAM
EMC_CLK_OUT_FLASH
EMC_XCS_0
EMC_XRAS
EMC_INT
VC-582 BOARD(9/30)
SDRAM/ONENAND
XX MARK:NO MOUNT

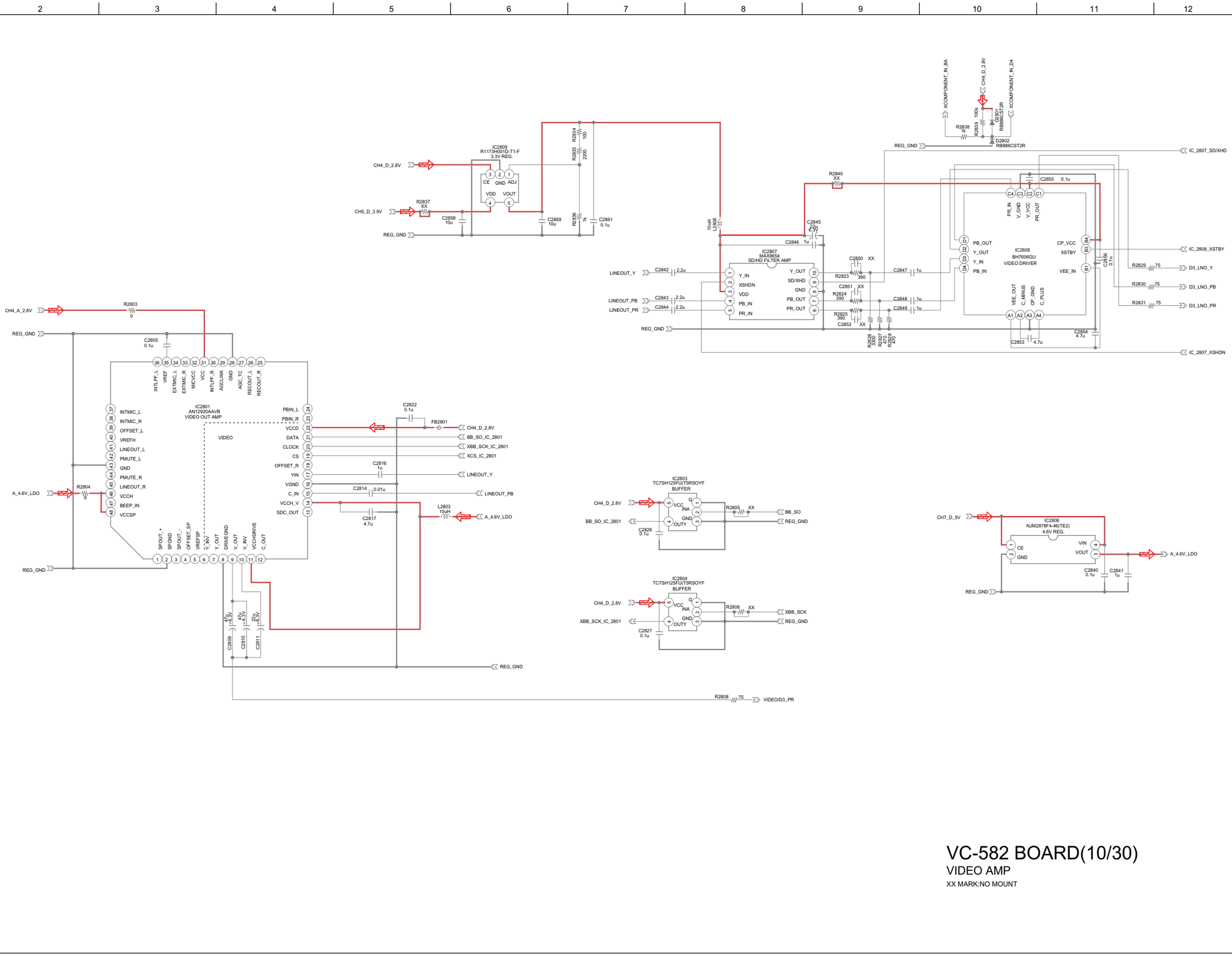

VC-582 BOARD(10/30)

VIDEO AMP

XX MARK:NO MOUNT

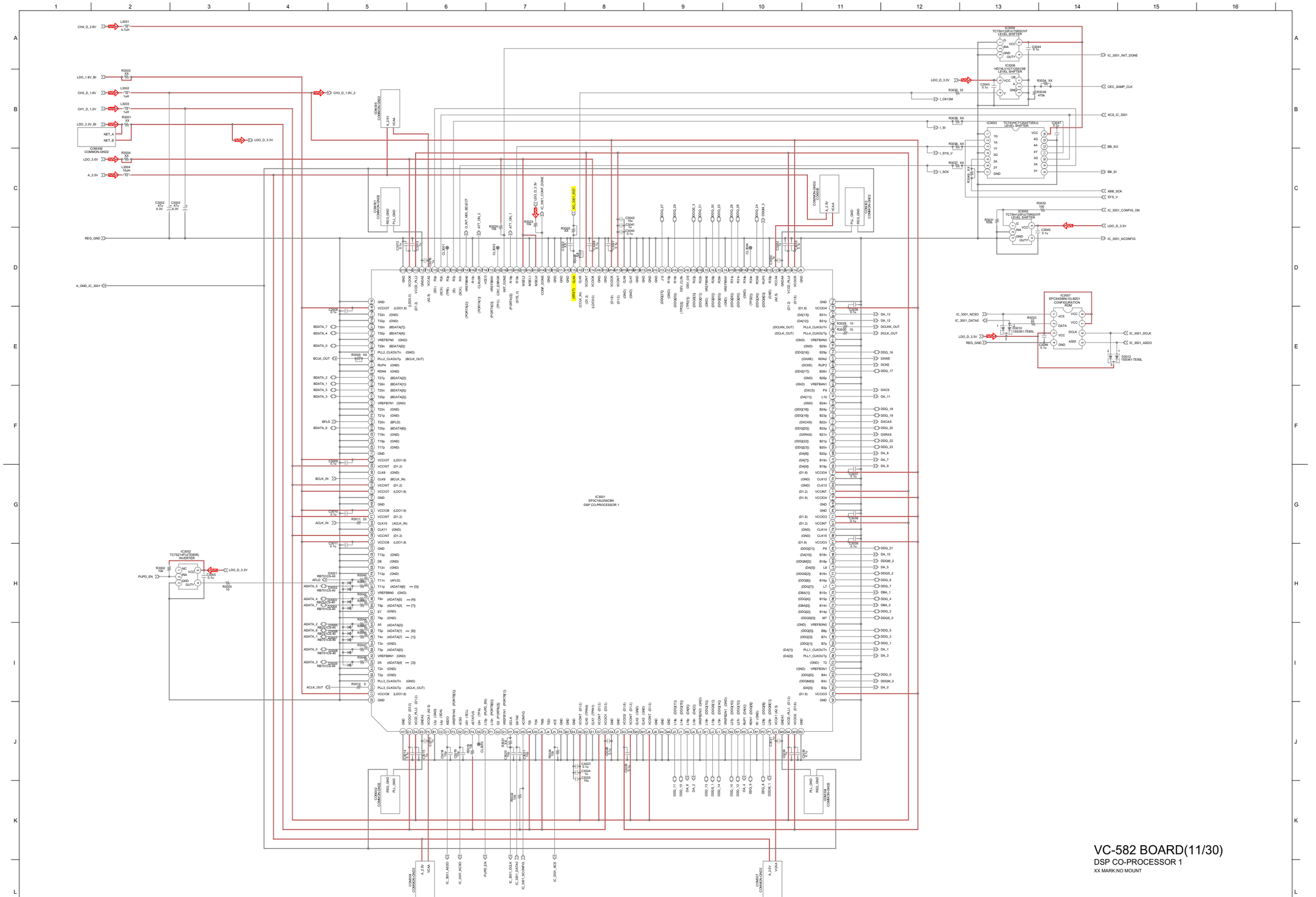
VC-582 BOARD(11/30)
DSP CO-PROCESSOR 1
XX MARK:NO MOUNT

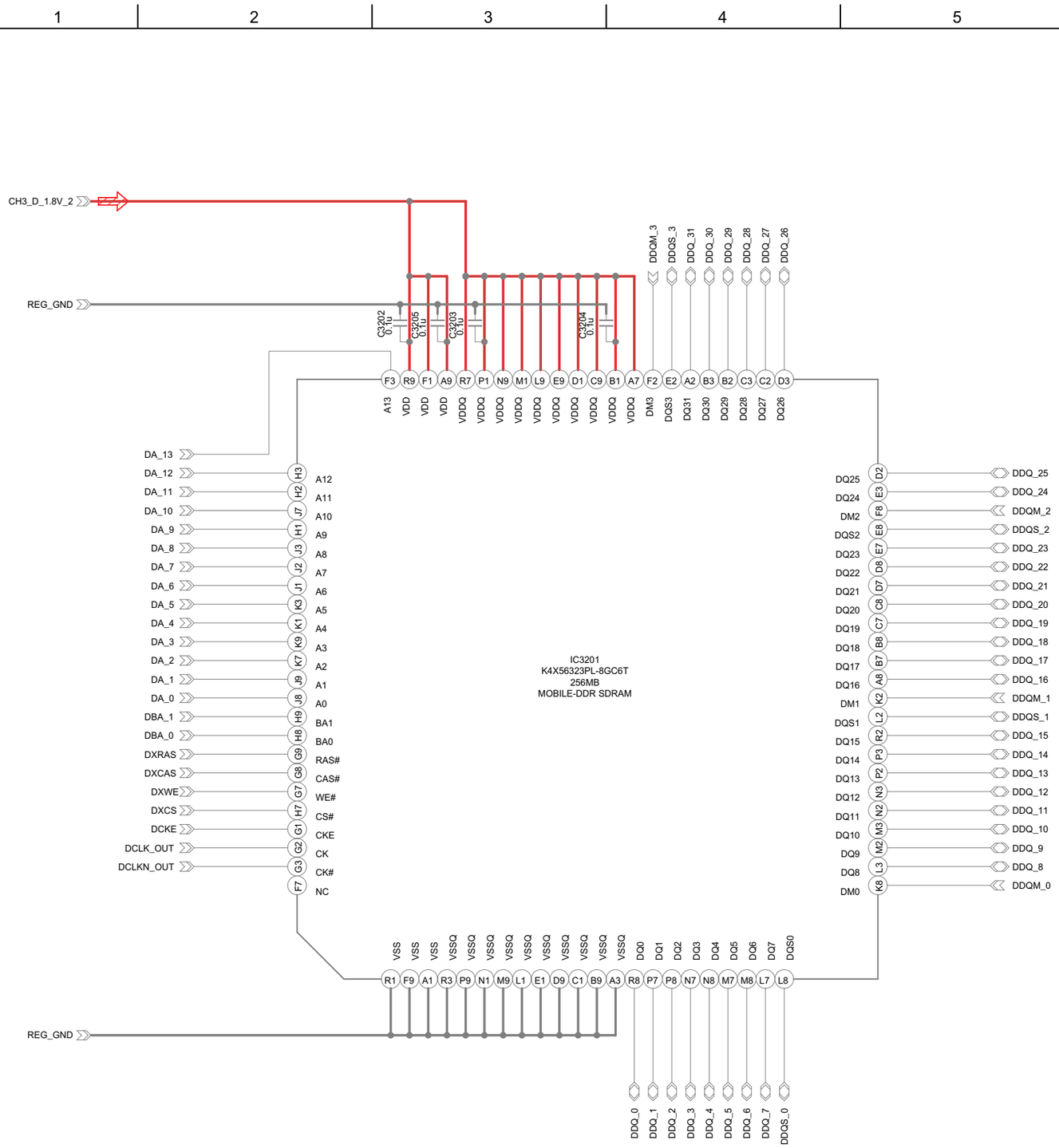

VC-582 BOARD(12/30)

MOBILE-DDR SDRAM

XX MARK:NO MOUNT

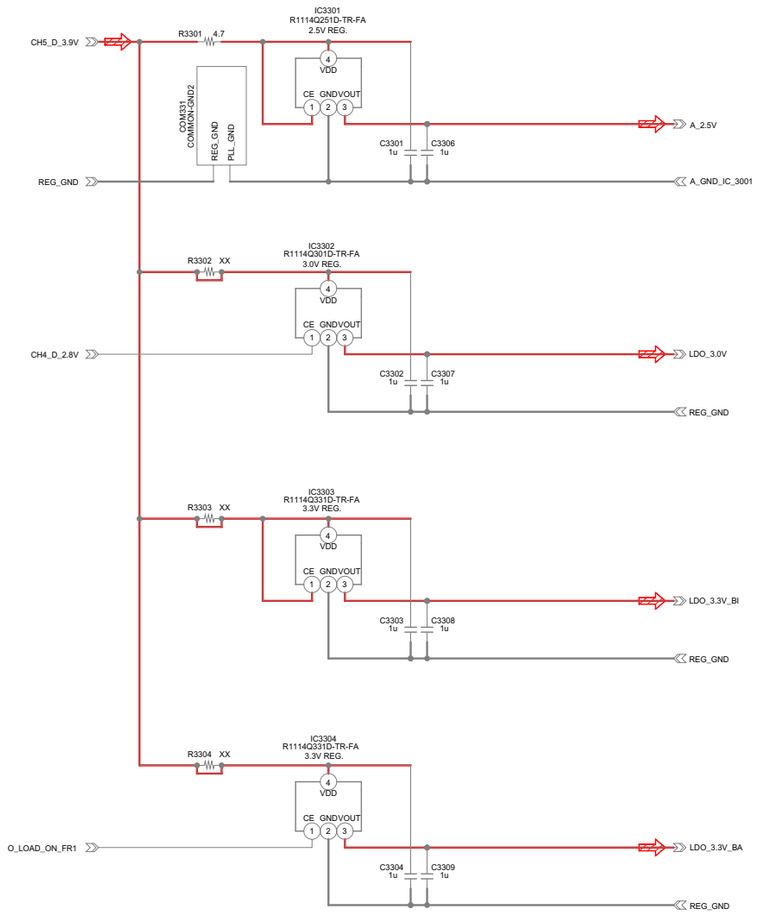

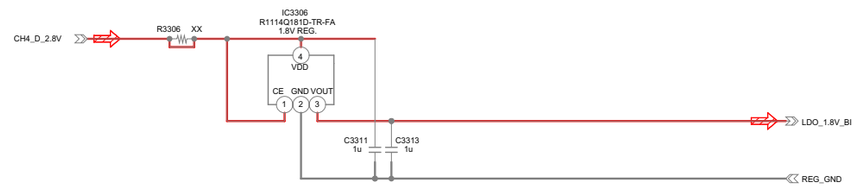

VC-582 BOARD(13/30)

REGULATORS

XX MARK:NO MOUNT

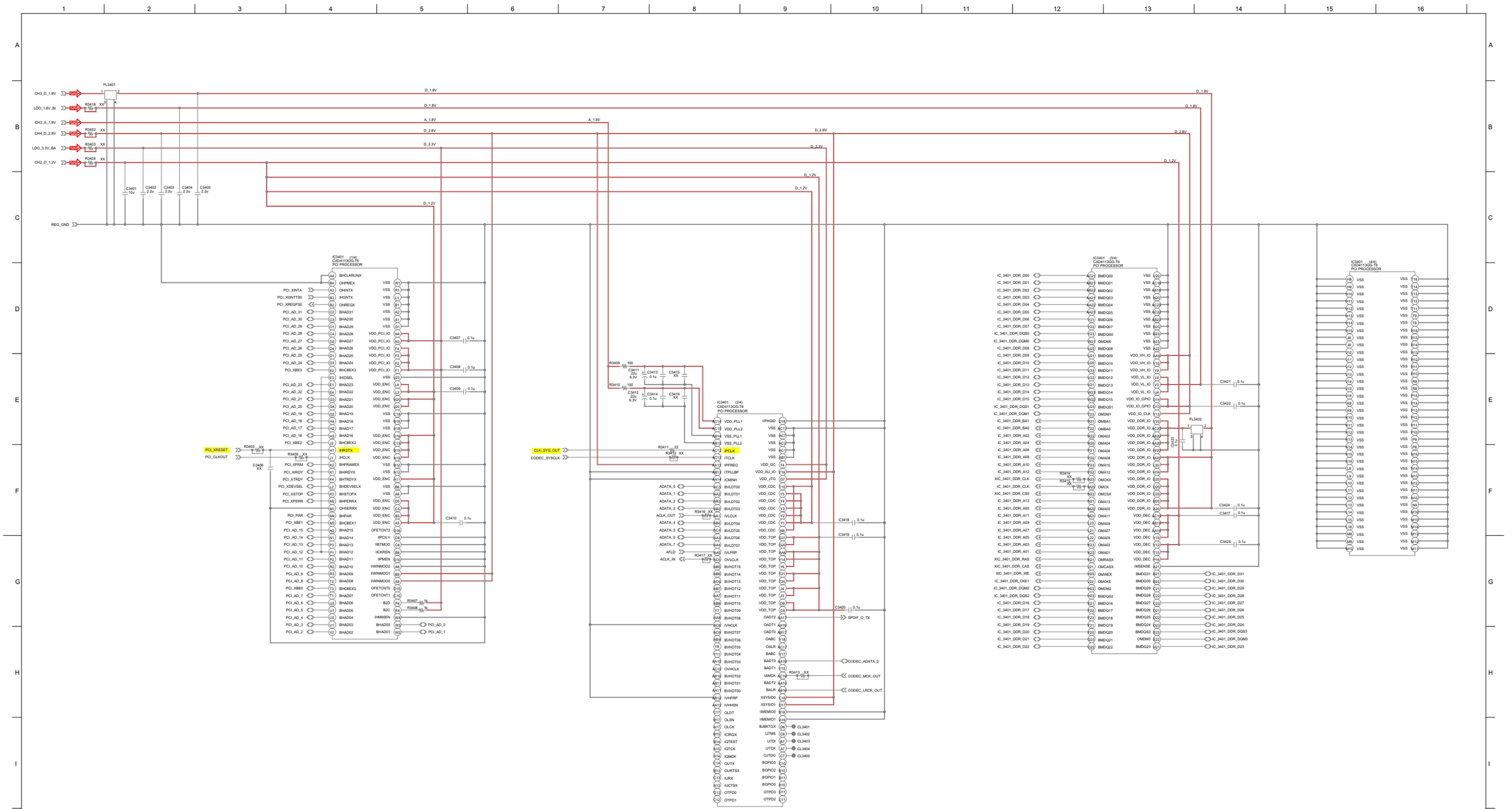

VC-582 BOARD (14/30)

PCI PROCESSOR

XX MARK:NO MOUNT

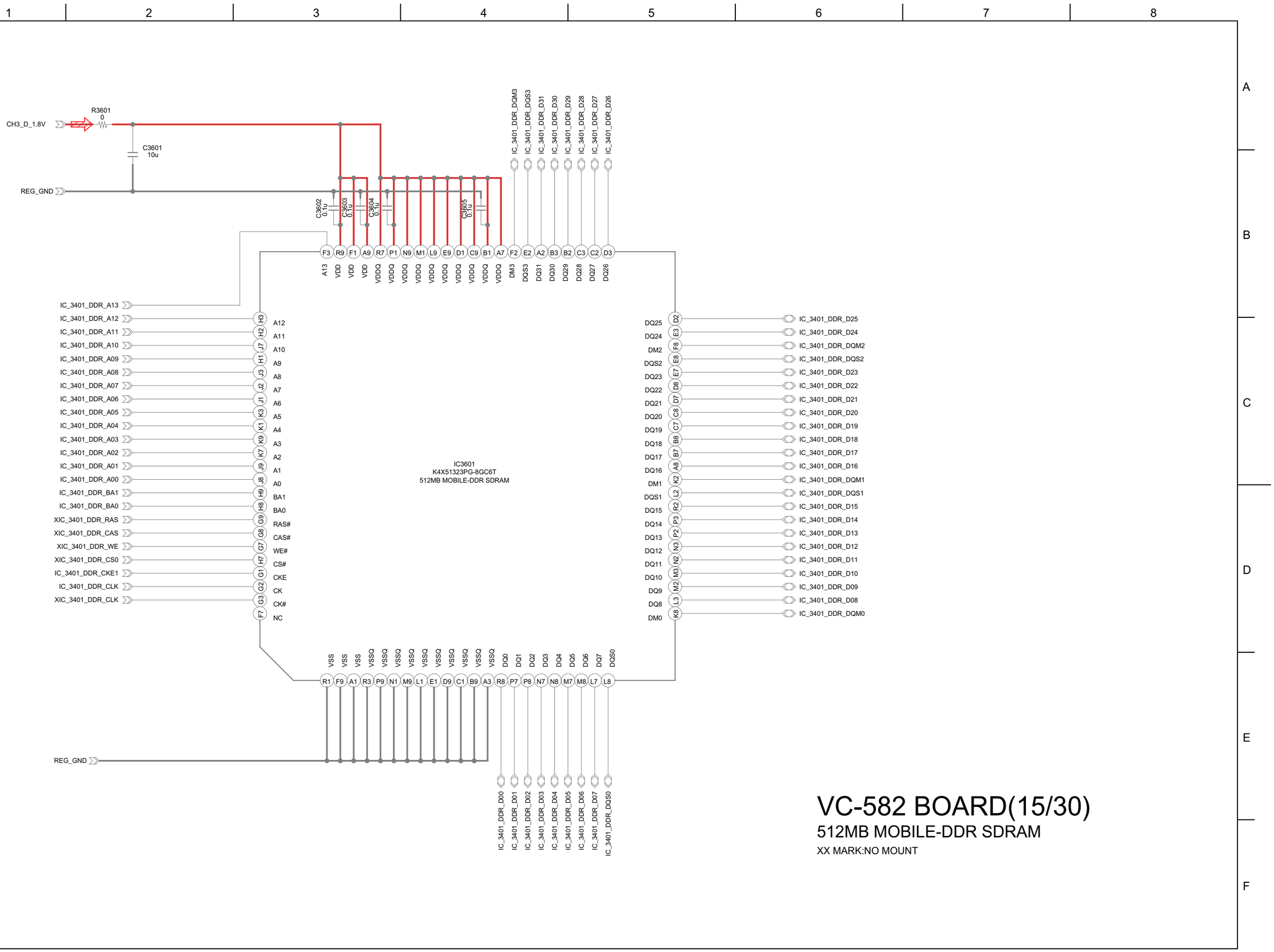
R3601
0
CH3_D_1.8V
C3601
10u
REG_GND
C3602
0.1u
C3603
0.1u
C3604
0.1u
C3605
0.1u
IC_3401_DDR_DQM3
IC_3401_DDR_DQS3
IC_3401_DDR_D31
IC_3401_DDR_D30
IC_3401_DDR_D29
IC_3401_DDR_D28
IC_3401_DDR_D27
IC_3401_DDR_D26
F3 R9 F1 A9 R7 P1 N9 M1 L9 E9 D1 C9 B1 A7 F2 E2 A2 B3 B2 C3 C2 D3
A13 VDD VDD VDD VDDQ VDDQ VDDQ VDDQ VDDQ VDDQ VDDQ VDDQ VDDQ VDDQ DM3 DQS3 DQ31 DQ30 DQ29 DQ28 DQ27 DQ26
IC_3401_DDR_A13
IC_3401_DDR_A12
IC_3401_DDR_A11
IC_3401_DDR_A10
IC_3401_DDR_A09
IC_3401_DDR_A08
IC_3401_DDR_A07
IC_3401_DDR_A06
IC_3401_DDR_A05
IC_3401_DDR_A04
IC_3401_DDR_A03
IC_3401_DDR_A02
IC_3401_DDR_A01
IC_3401_DDR_A00
IC_3401_DDR_BA1
IC_3401_DDR_BA0
XIC_3401_DDR_RAS
XIC_3401_DDR_CAS
XIC_3401_DDR_WE
XIC_3401_DDR_CS0
IC_3401_DDR_CKE1
IC_3401_DDR_CLK
XIC_3401_DDR_CLK
H3 H2 J7 H1 J3 J2 J1 K3 K1 K9 K7 J9 J8 H9 H8 G9 G8 G7 H7 G1 G2 G3 F7
A12 A11 A10 A9 A8 A7 A6 A5 A4 A3 A2 A1 A0 BA1 BA0 RAS# CAS# WE# CS# CKE CK CK# NC
IC3601
K4X51323PG-8GC6T
512MB MOBILE-DDR SDRAM
DQ25 DQ24 DM2 DQS2 DQ23 DQ22 DQ21 DQ20 DQ19 DQ18 DQ17 DQ16 DM1 DQS1 DQ15 DQ14 DQ13 DQ12 DQ11 DQ10 DQ9 DQ8 DM0
D2 E3 F8 E8 E7 D8 D7 C8 C7 B8 B7 A8 K2 L2 R2 P3 P2 N3 N2 M3 M2 L3 K8
IC_3401_DDR_D25
IC_3401_DDR_D24
IC_3401_DDR_DQM2
IC_3401_DDR_DQS2
IC_3401_DDR_D23
IC_3401_DDR_D22
IC_3401_DDR_D21
IC_3401_DDR_D20
IC_3401_DDR_D19
IC_3401_DDR_D18
IC_3401_DDR_D17
IC_3401_DDR_D16
IC_3401_DDR_DQM1
IC_3401_DDR_DQS1
IC_3401_DDR_D15
IC_3401_DDR_D14
IC_3401_DDR_D13
IC_3401_DDR_D12
IC_3401_DDR_D11
IC_3401_DDR_D10
IC_3401_DDR_D09
IC_3401_DDR_D08
IC_3401_DDR_DQM0
VSS VSS VSS VSSQ VSSQ VSSQ VSSQ VSSQ VSSQ VSSQ VSSQ VSSQ VSSQ DQ0 DQ1 DQ2 DQ3 DQ4 DQ5 DQ6 DQ7 DQS0
R1 F9 A1 R3 P9 N1 M9 L1 E1 D9 C1 B9 A3 R8 P7 P8 N7 N8 M7 M8 L7 L8
REG_GND
IC_3401_DDR_D00
IC_3401_DDR_D01
IC_3401_DDR_D02
IC_3401_DDR_D03
IC_3401_DDR_D04
IC_3401_DDR_D05
IC_3401_DDR_D06
IC_3401_DDR_D07
IC_3401_DDR_DQS0
VC-582 BOARD(15/30)
512MB MOBILE-DDR SDRAM
XX MARK:NO MOUNT
08

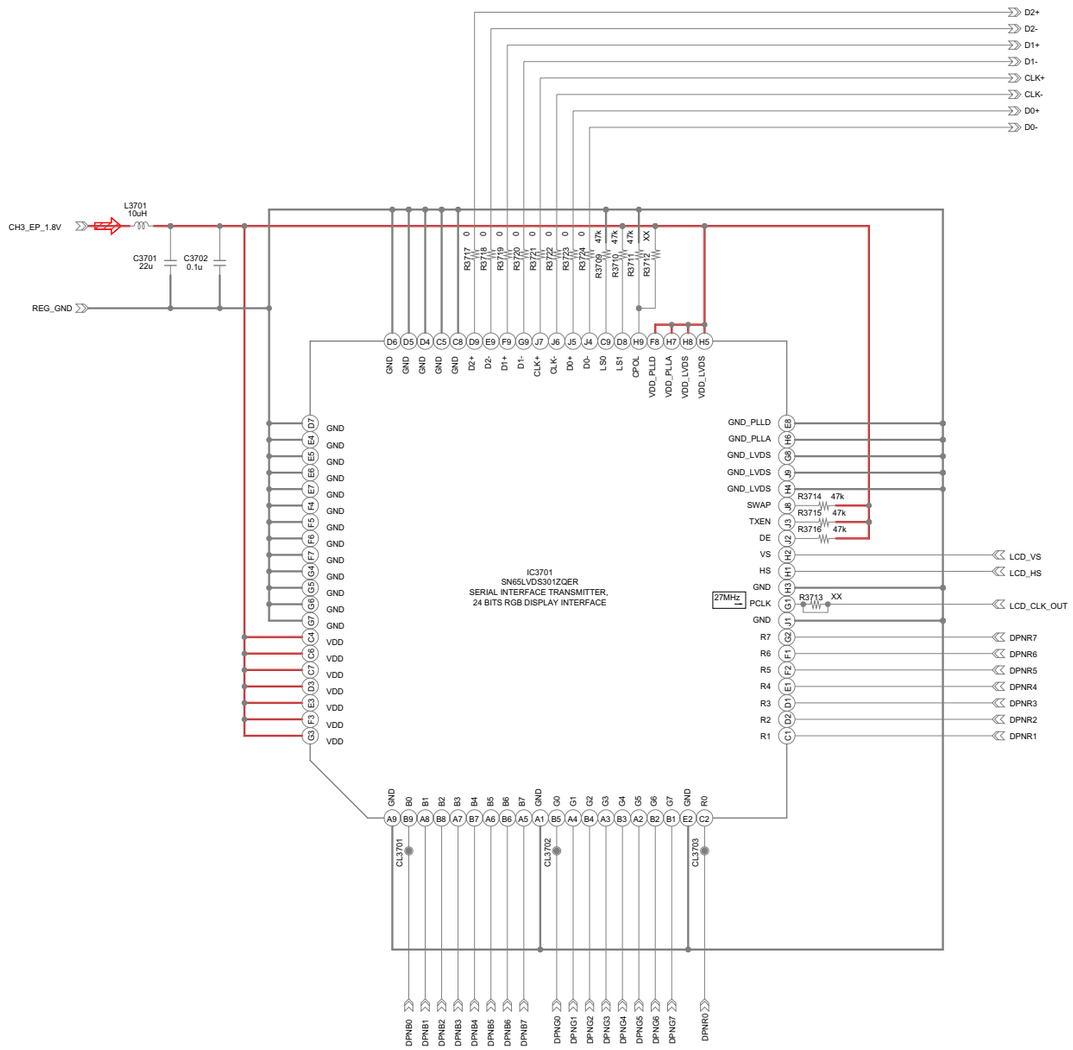

VC-582 BOARD(16/30)

SERIAL INTERFACE TRANSMITTER,
24BITS RGB DISPLAY INTERFACE

XX MARK:NO MOUNT

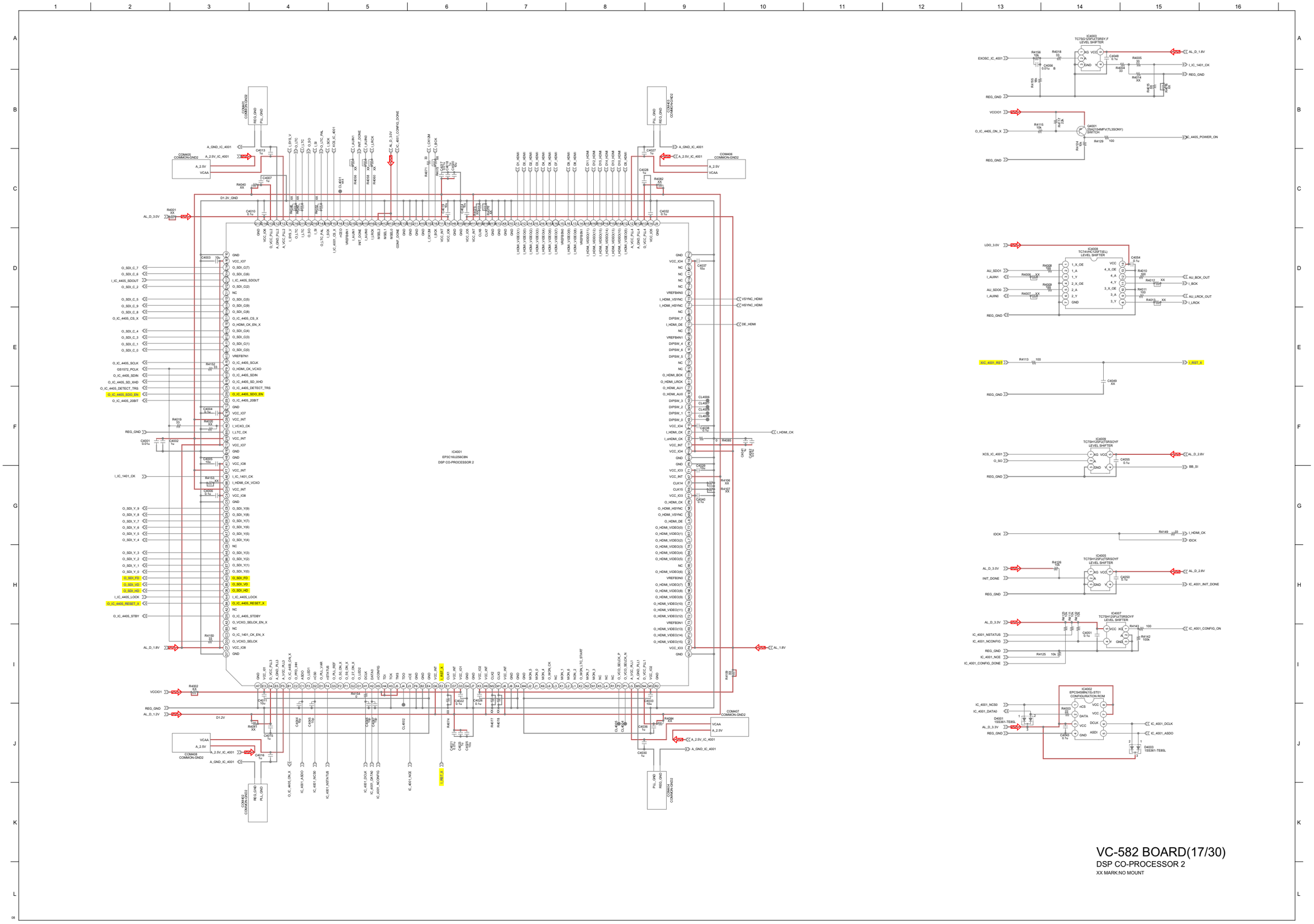
IC4001
EP3C16U256C8N
DSP CO-PROCESSOR 2
VC-582 BOARD(17/30)
DSP CO-PROCESSOR 2
XX MARK:NO MOUNT

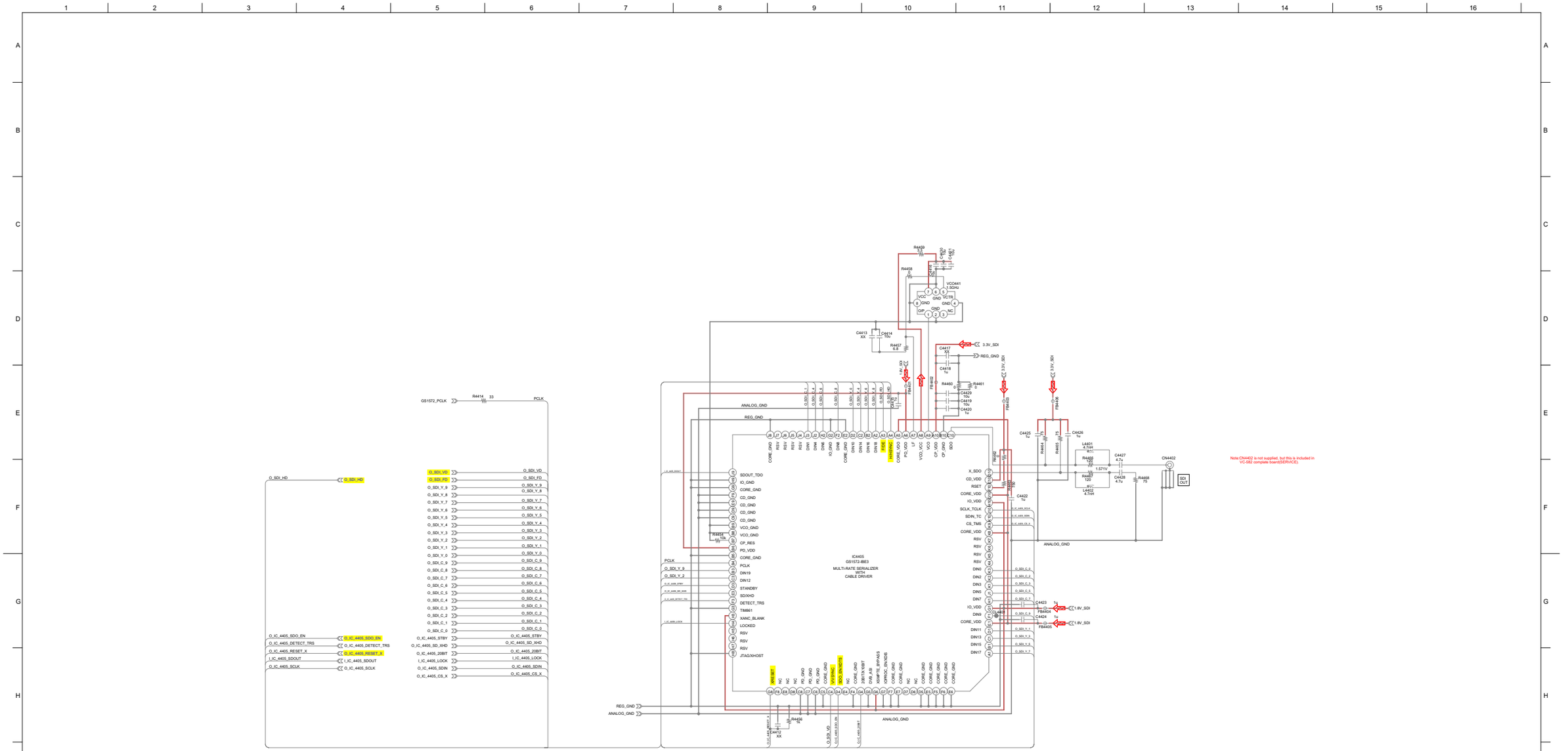

VC-582 BOARD(18/30)

MULTI-RATE SERIALIZER

XX MARK:NO MOUNT

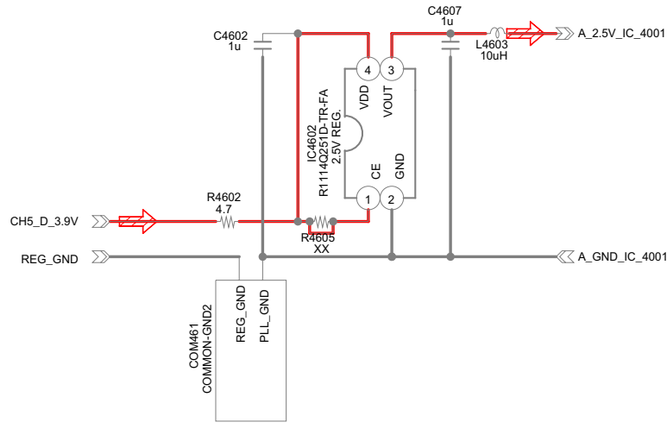

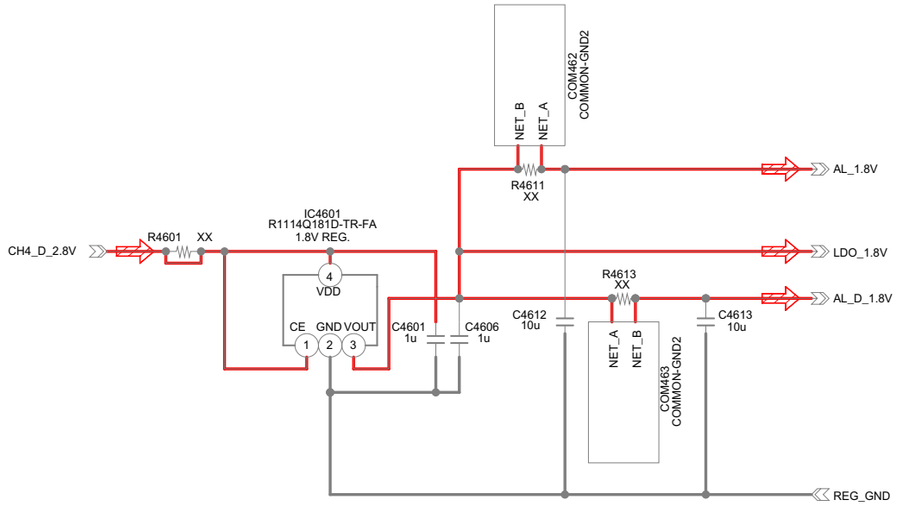

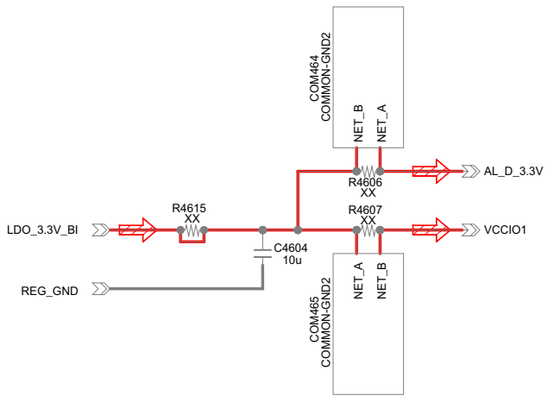

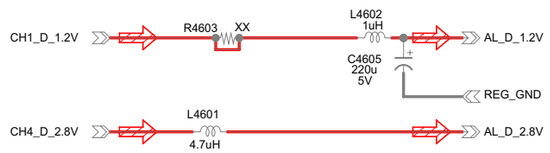

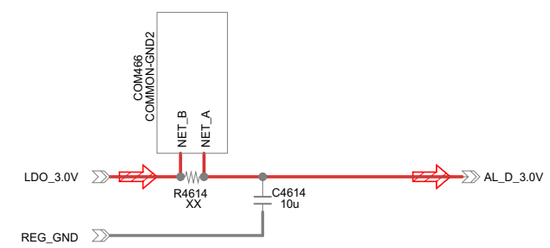

VC-582 BOARD(19/30)

REGULATORS

XX MARK:NO MOUNT

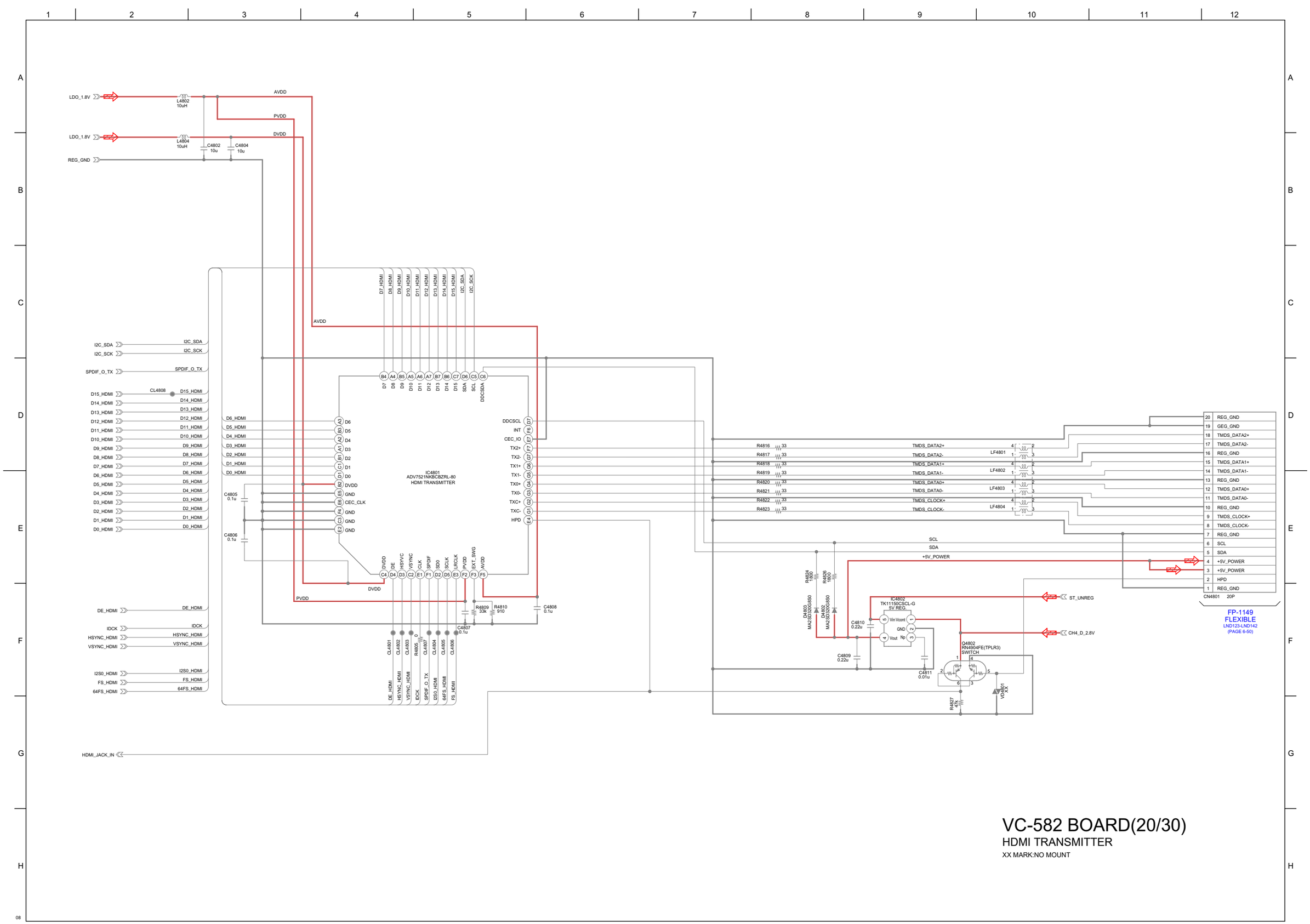

VC-582 BOARD(20/30)

HDMI TRANSMITTER

XX MARK:NO MOUNT

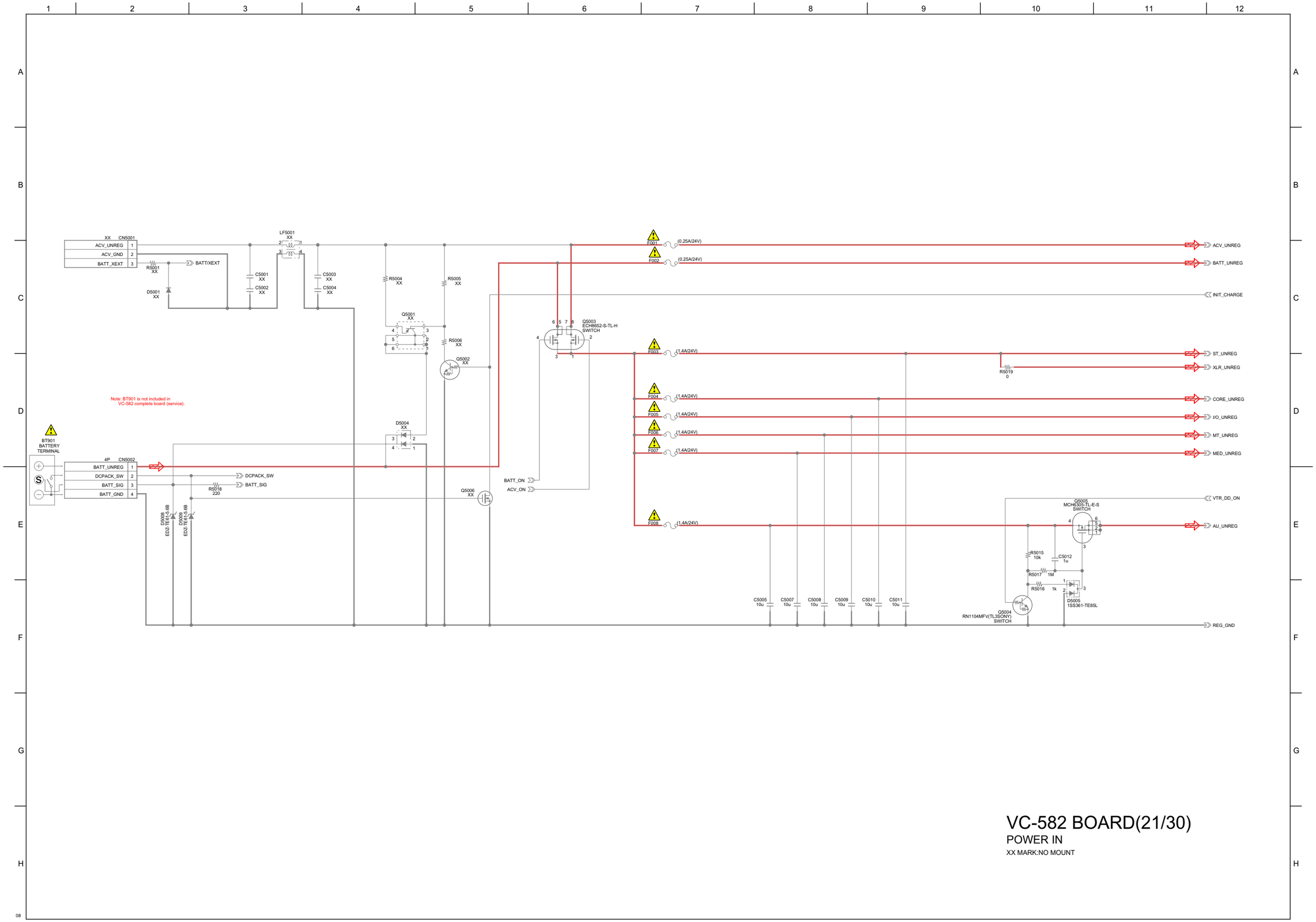

VC-582 BOARD(21/30)

POWER IN

XX MARK:NO MOUNT

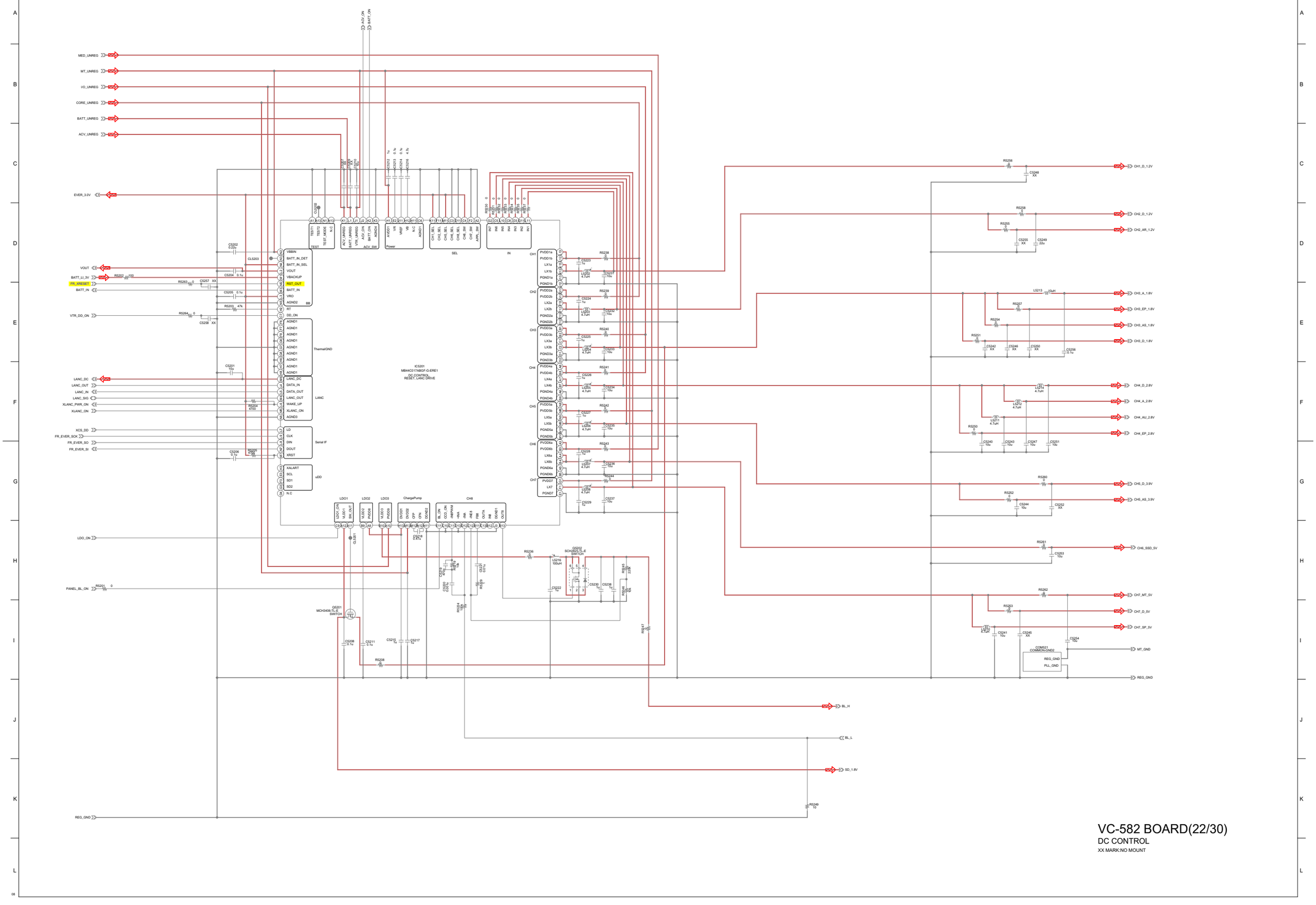
MED_UNREG
MT_UNREG
I/O_UNREG
CORE_UNREG
BATT_UNREG
ACV_UNREG
EVER_3.0V
VOUT
BATT_LI_3V
FR_HRESET
BATT_IN
VTR_DD_ON
LANC_DC
LANC_OUT
LANC_IN
LANC_SIG
XLANC_PWR_ON
XLANC_ON
XCS_DD
FR_EVER_SCK
FR_EVER_SO
FR_EVER_SI
LDO_ON
PANEL_BL_ON
REG_GND
ACV_ON
BATT_ON
IC5201
MB44C017ABGF-G-ERE1
DC CONTROL
RESET, LANC DRIVE
TEST
ACV_SW
Power
SEL
IN
ThermalGND
LANC
Serial IF
uDD
LDO1
LDO2
LDO3
ChargePump
CH8
SWITCH
CH1_D_1.2V
CH2_D_1.2V
CH2_AR_1.2V
CH3_A_1.8V
CH3_EP_1.8V
CH3_AS_1.8V
CH3_D_1.8V
CH4_D_2.8V
CH4_A_2.8V
CH4_AU_2.8V
CH4_EP_2.8V
CH5_D_3.9V
CH5_AS_3.9V
CH6_SSD_5V
CH7_MT_5V
CH7_D_5V
CH7_SP_5V
MT_GND
REG_GND
BL_H
BL_L
SD_1.8V
VC-582 BOARD(22/30)
DC CONTROL
XX MARK:NO MOUNT

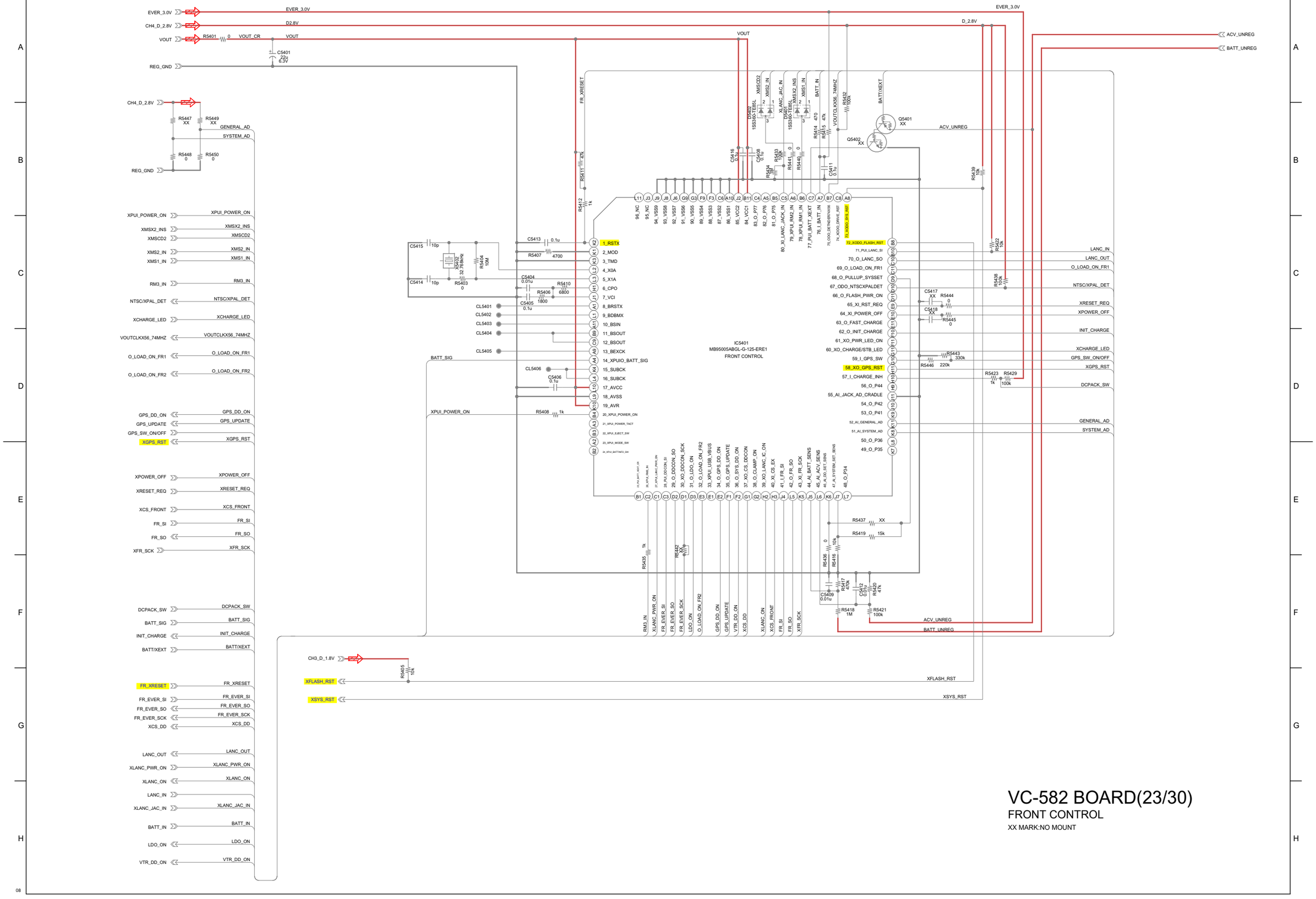

VC-582 BOARD(23/30)

FRONT CONTROL

XX MARK:NO MOUNT

VC-582 BOARD(24/30)

CAMERA CONTROL

XX MARK:NO MOUNT

IC5601
MB91195ABGL-G-270-ERE1
CAMERA CONTROL

IC5602
AK6514CF-E2
128K EEPROM

IC5603
AK6512CAS-E2
64k EEPROM

IC5604
XX

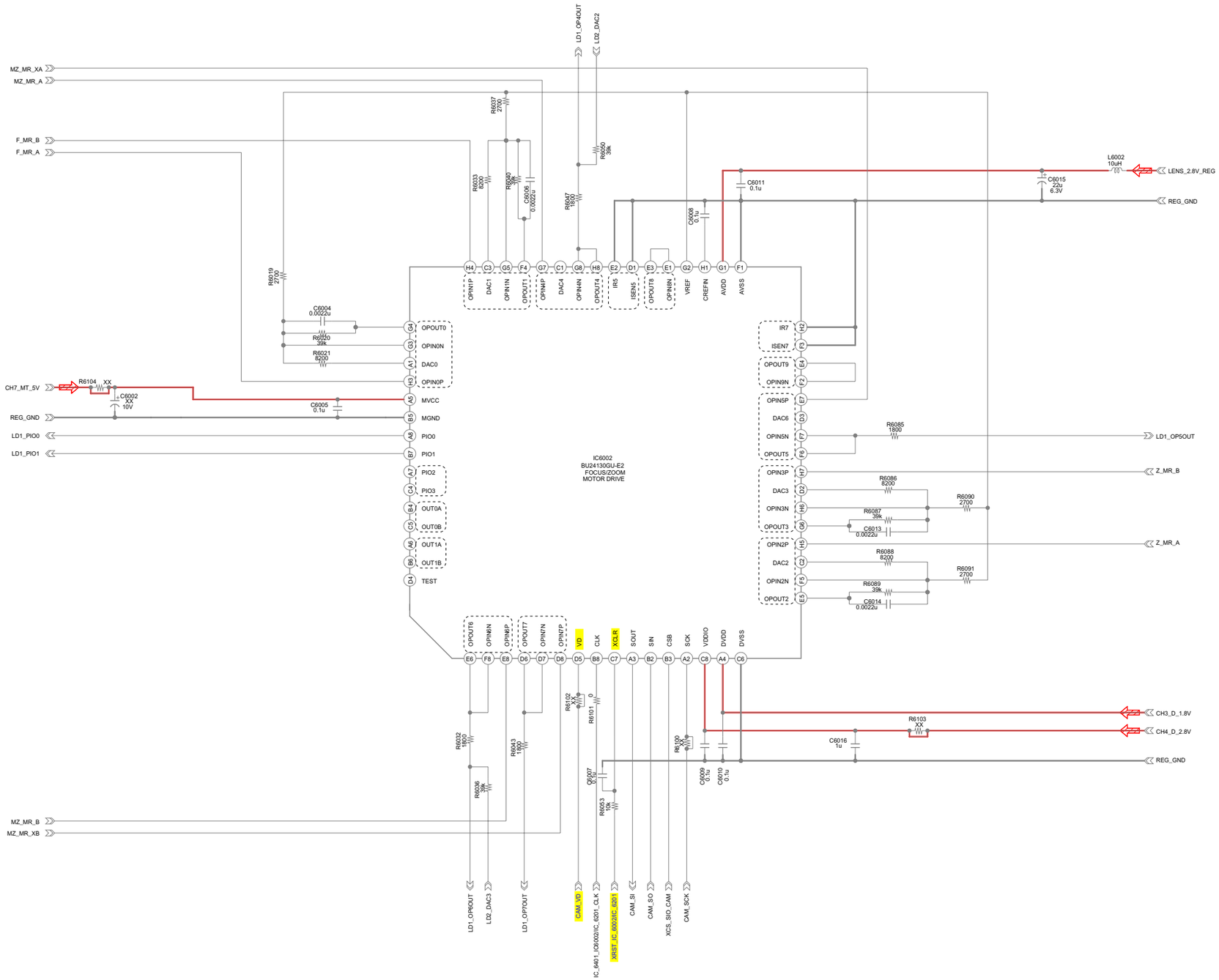
IC6002
BU24130GU-E2
FOCUS/ZOOM
MOTOR DRIVE
VC-582 BOARD(25/30)
FOCUS/ZOOM MOTOR DRIVE
XX MARK:NO MOUNT

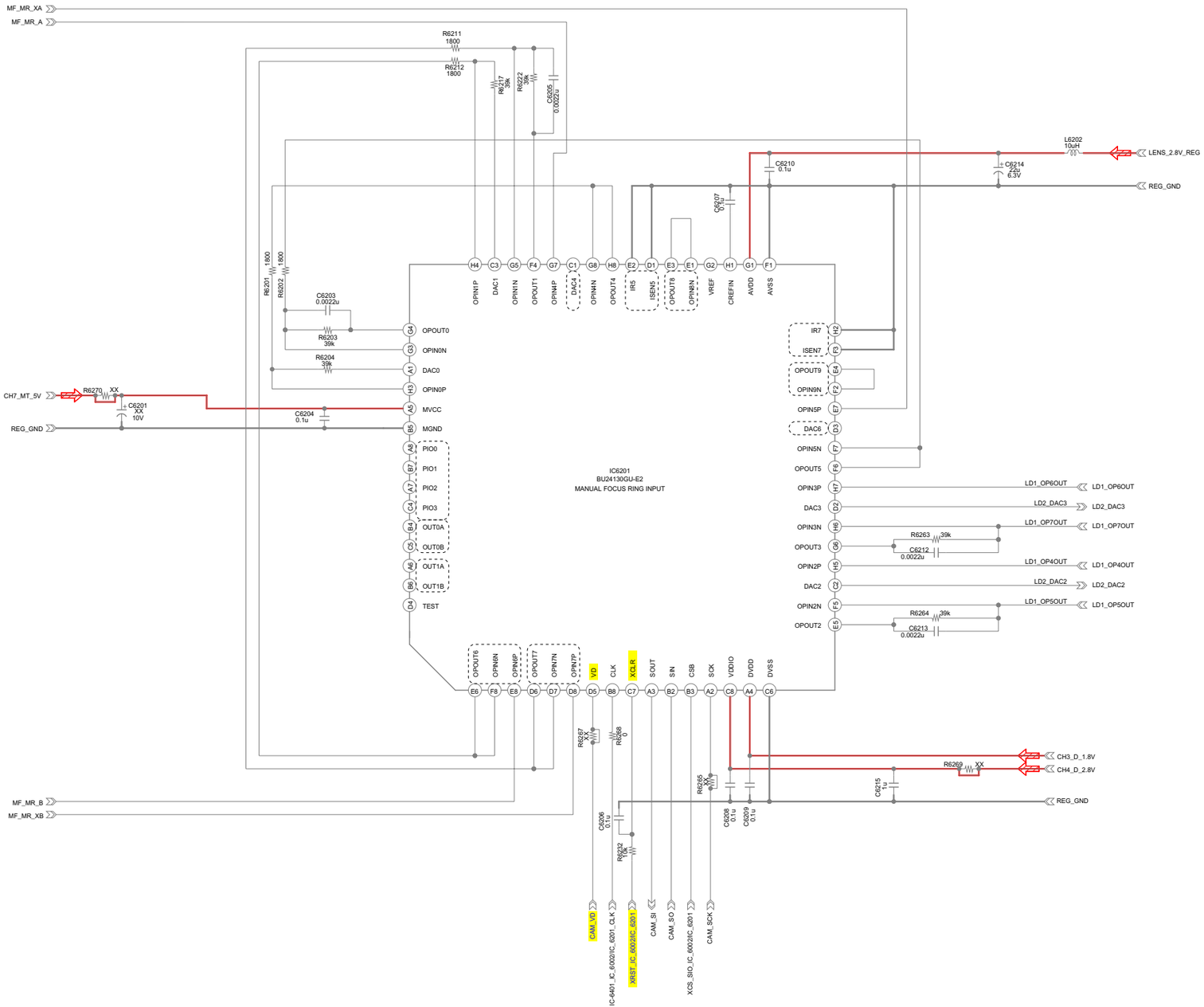

VC-582 BOARD (26/30)

MANUAL FOCUS RING INPUT

XX MARK:NO MOUNT

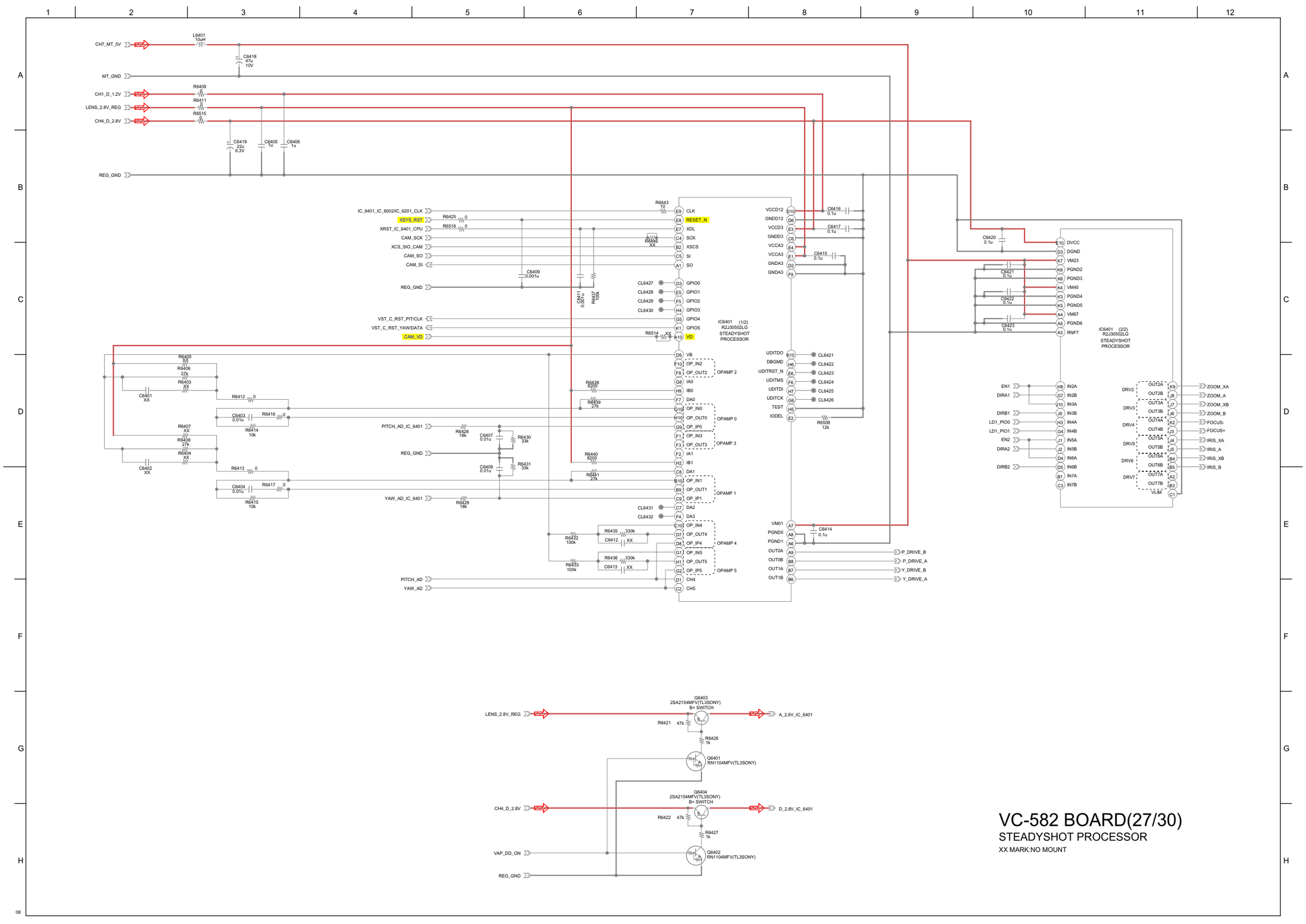

VC-582 BOARD(27/30)

STEADYSHOT PROCESSOR

XX MARK:NO MOUNT

Note: LENS DRIVE BLOCK(CF0023) is replaced as block
so that there PRINTED WIRING BOARD and SCHEMATIC DIAGRAM are omitted.

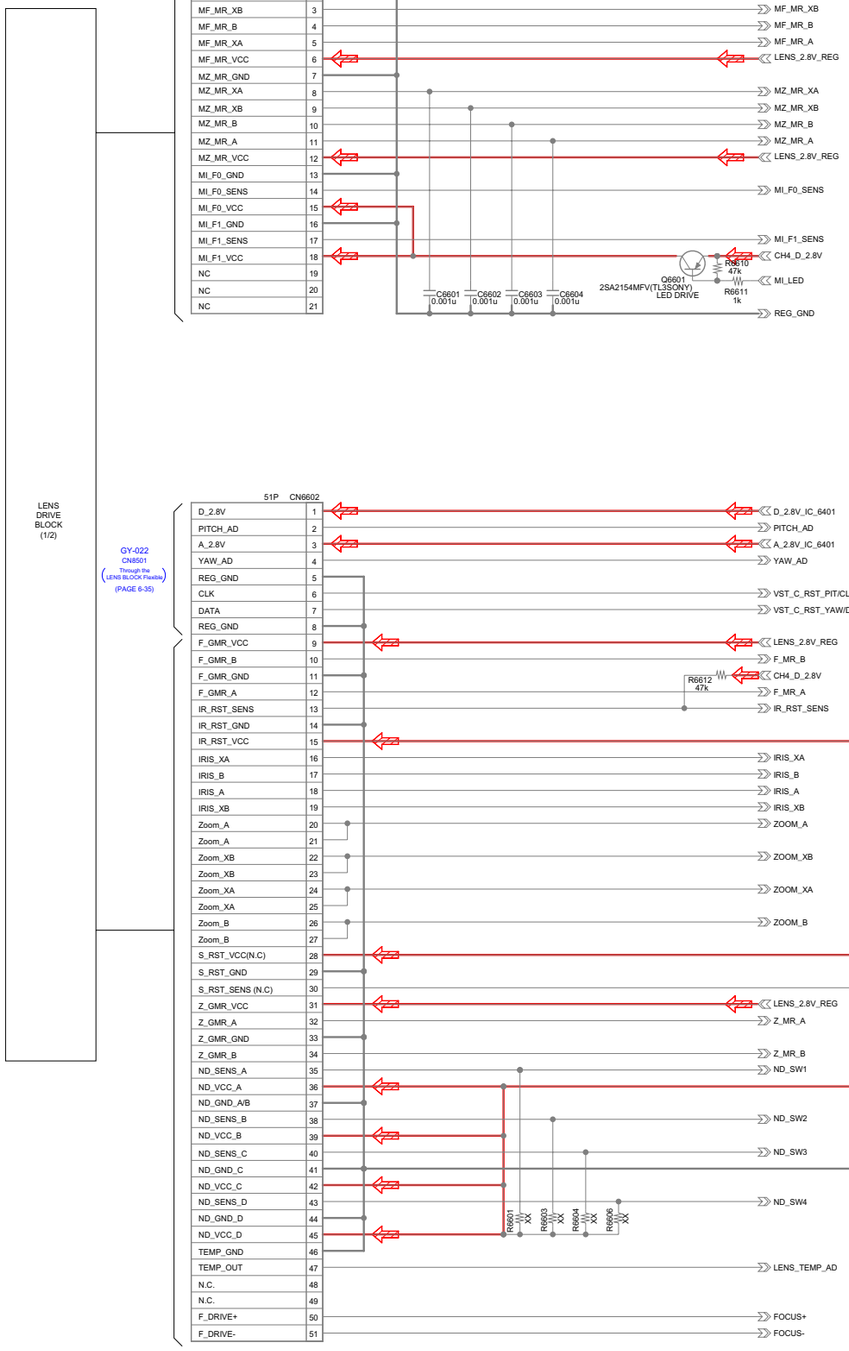

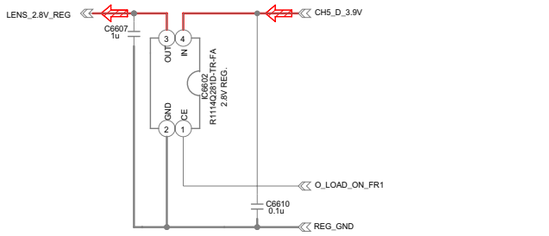

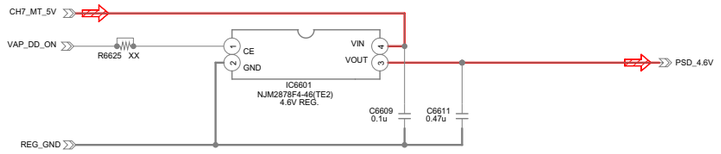

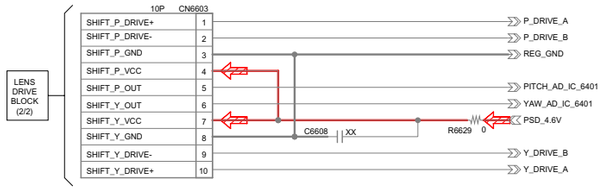

Note: LENS DRIVE BLOCK(CF0023) is replaced as block
so that there PRINTED WIRING BOARD and SCHEMATIC DIAGRAM are omitted.

VC-582 BOARD(28/30)

CONNECTORS TO LENS DRIVE

XX MARK:NO MOUNT

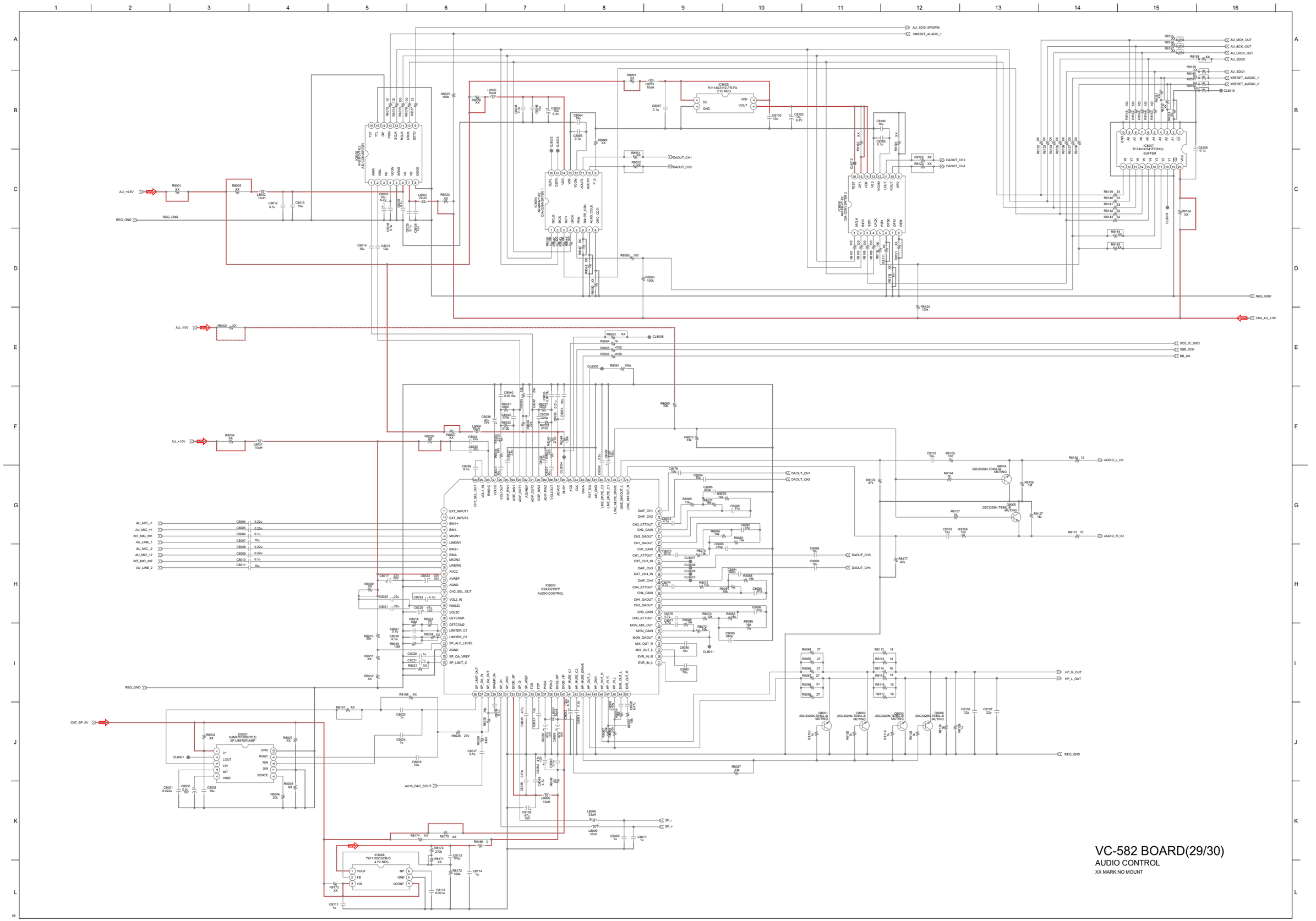
VC-582 BOARD(29/30)
AUDIO CONTROL
XX MARK:NO MOUNT

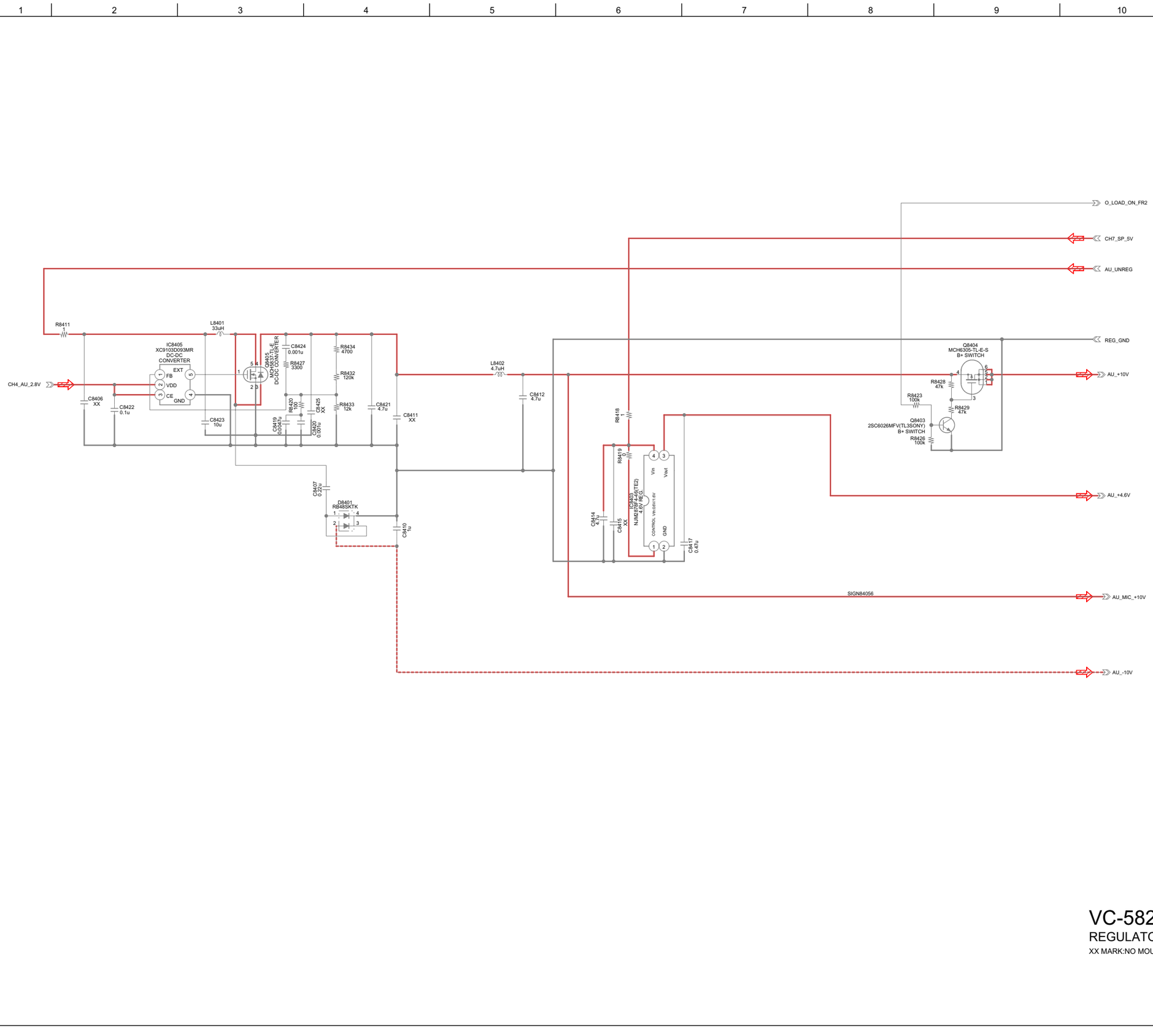

VC-582 BOARD(30/30)

REGULATORS FOR AUDIO

XX MARK:NO MOUNT

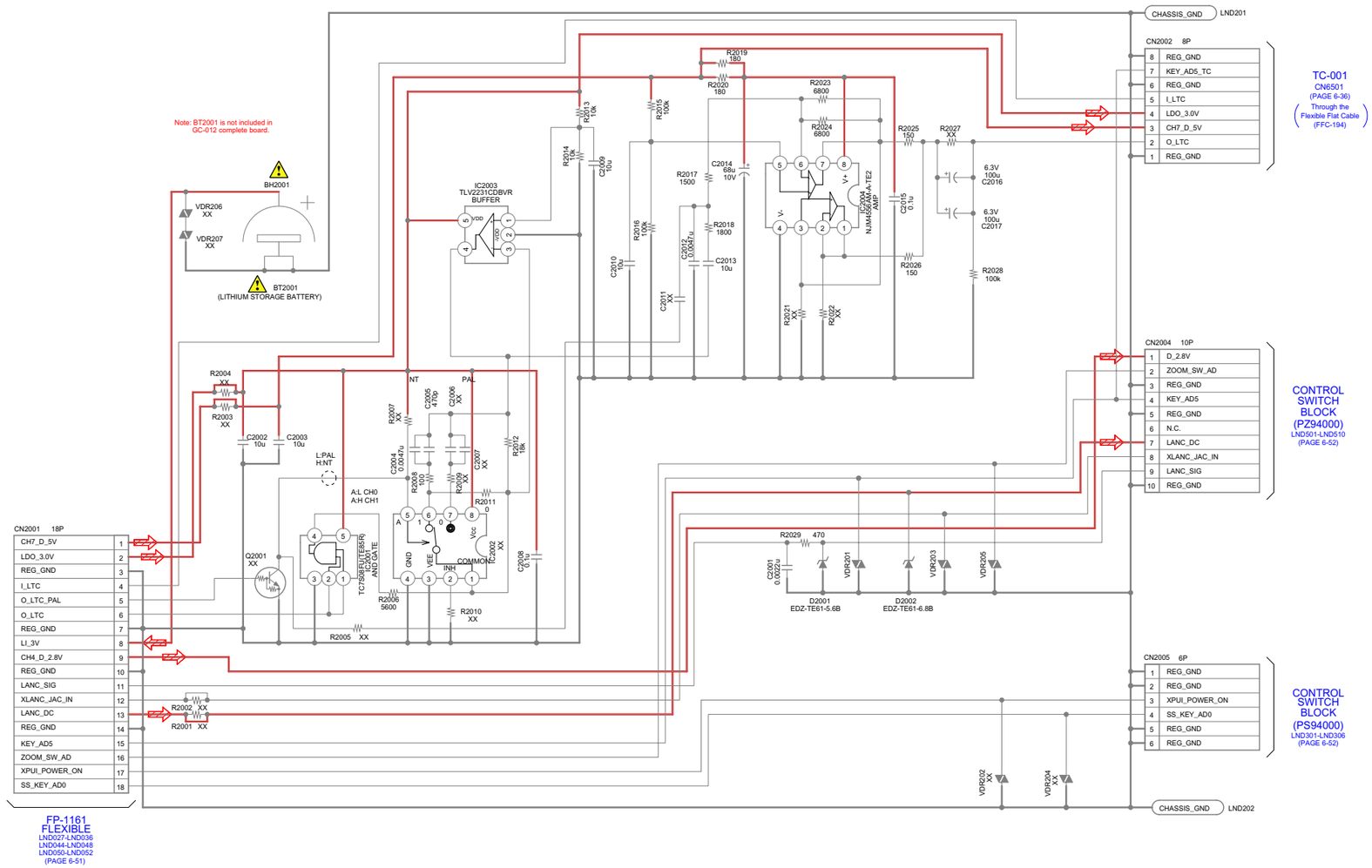

GC-012 BOARD

TC GRIP, RELAY

XX MARK:NO MOUNT

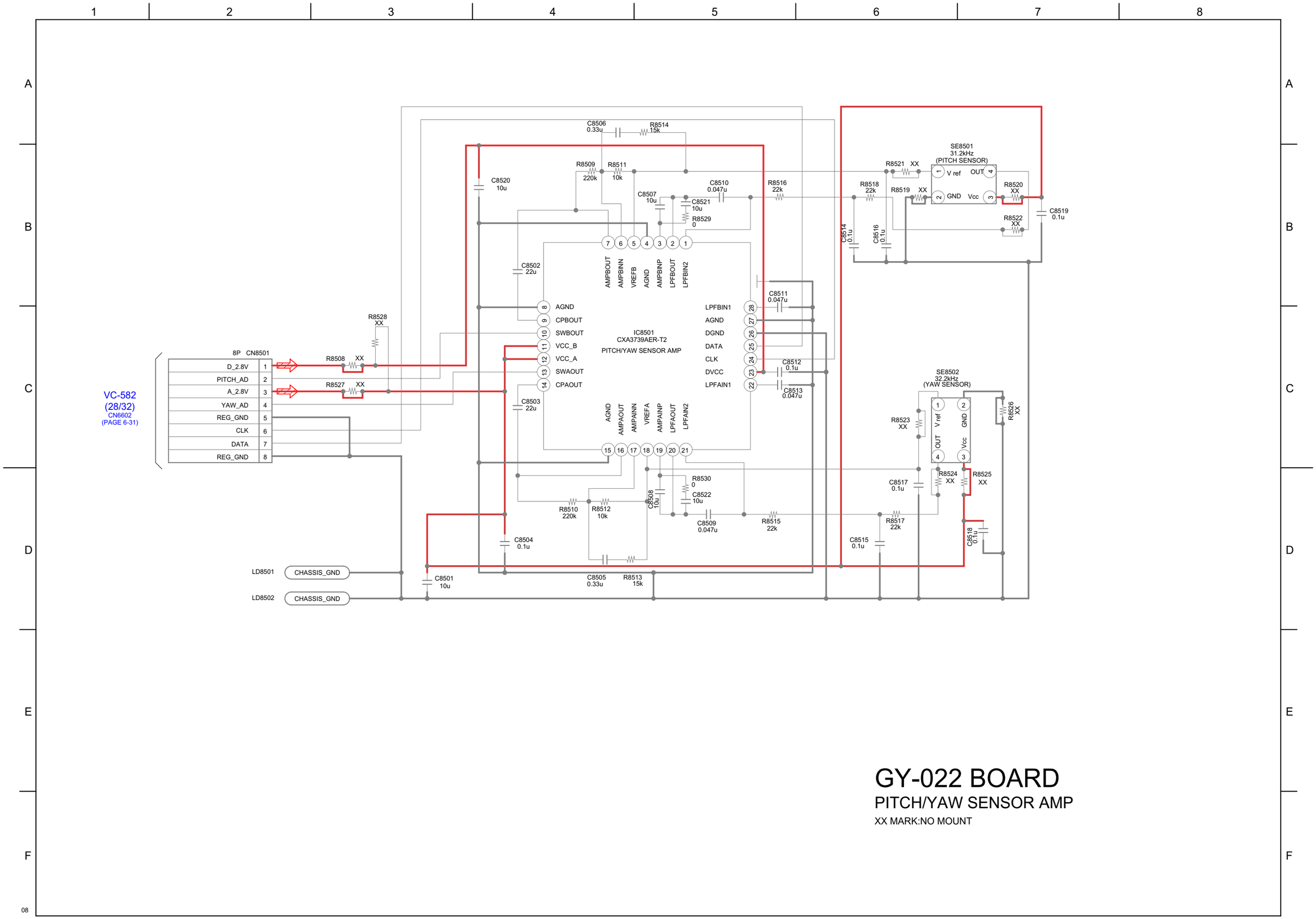
1
2
3
4
5
6
7
8
A
B
C
D
E
F
VC-582
(28/32)
CN6602
(PAGE 6-31)
8P CN8501
D_2.8V 1
PITCH_AD 2
A_2.8V 3
YAW_AD 4
REG_GND 5
CLK 6
DATA 7
REG_GND 8
R8528 XX
R8508 XX
R8527 XX
C8506 0.33u
R8514 15k
R8509 220k
R8511 10k
C8520 10u
C8507 10u
C8521 10u
R8529 0
C8510 0.047u
R8516 22k
C8502 22u
C8503 22u
IC8501
CXA3739AER-T2
PITCH/YAW SENSOR AMP
AGND
CPBOUT
SWBOUT
VCC_B
VCC_A
SWAOUT
CPAOUT
AMPBOUT
AMPBINN
VREFB
AGND
AMPBINP
LPFBOUT
LPFBIN2
LPFBIN1
AGND
DGND
DATA
CLK
DVCC
LPFAIN1
C8511 0.047u
C8512 0.1u
C8513 0.047u
AGND
AMPAOUT
AMPAINN
VREFA
AMPAINP
LPFAOUT
LPFAIN2
R8530 0
C8522 10u
C8508 10u
R8510 220k
R8512 10k
C8509 0.047u
R8515 22k
C8504 0.1u
C8505 0.33u
R8513 15k
C8501 10u
LD8501 CHASSIS_GND
LD8502 CHASSIS_GND
SE8501
31.2kHz
(PITCH SENSOR)
V ref
GND
OUT
Vcc
R8521 XX
R8518 22k
R8519 XX
R8520 XX
R8522 XX
C8519 0.1u
C8514 0.1u
C8516 0.1u
SE8502
32.2kHz
(YAW SENSOR)
R8523 XX
R8526 XX
R8524 XX
R8525 XX
C8517 0.1u
R8517 22k
C8515 0.1u
C8518 0.1u
GY-022 BOARD
PITCH/YAW SENSOR AMP
XX MARK:NO MOUNT
08

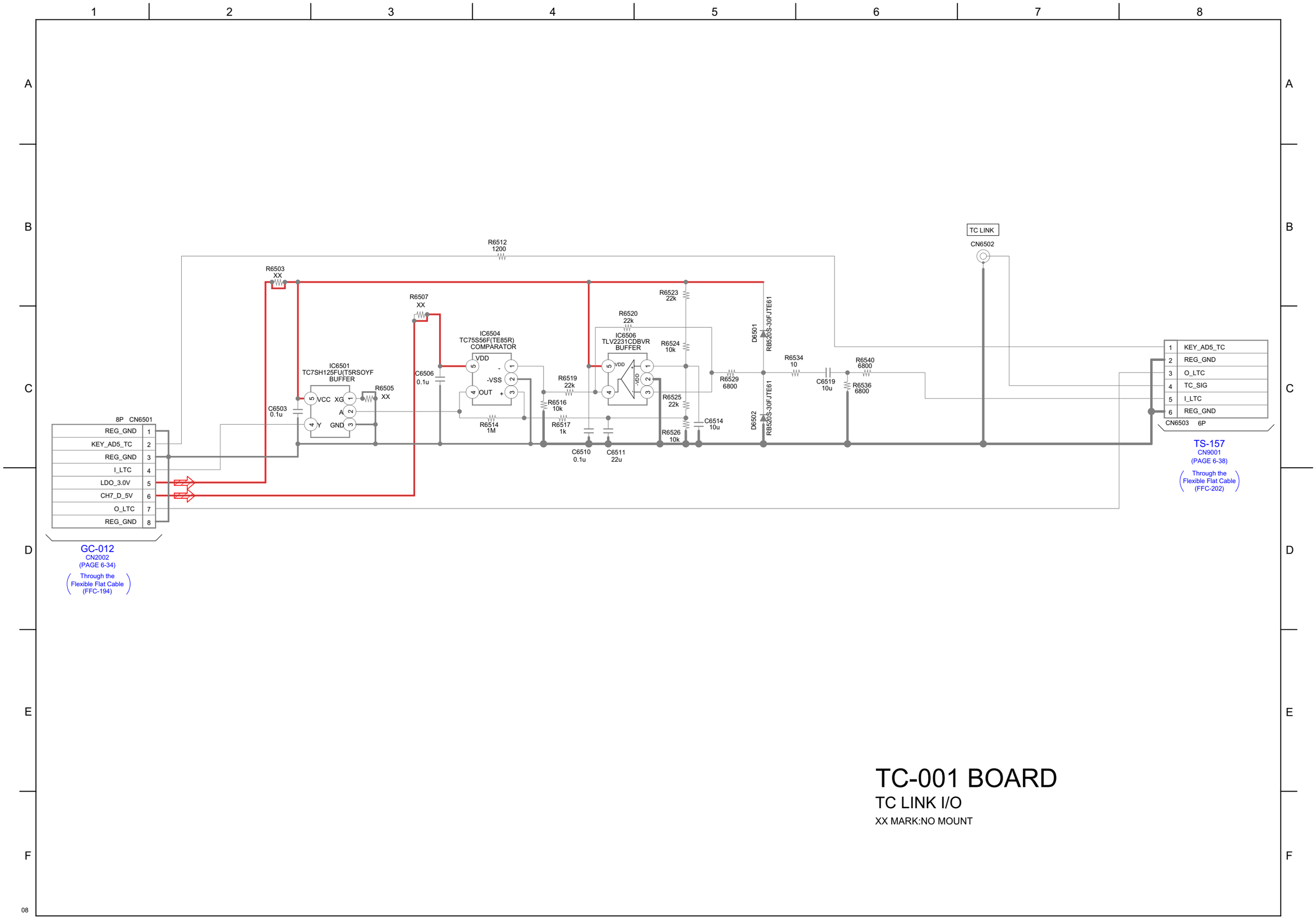
1
2
3
4
5
6
7
8
A
B
C
D
E
F
R6512
1200
R6503
XX
R6507
XX
C6506
0.1u
C6503
0.1u
R6505
XX
IC6501
TC7SH125FU(T5RSOYF
BUFFER
VCC
XG
A
Y
GND
IC6504
TC75S56F(TE85R)
COMPARATOR
VDD
-VSS
OUT
R6514
1M
R6519
22k
R6516
10k
R6517
1k
C6510
0.1u
C6511
22u
IC6506
TLV2231CDBVR
BUFFER
R6520
22k
R6523
22k
R6524
10k
R6525
22k
R6526
10k
C6514
10u
R6529
6800
D6501
RB520S-30FJTE61
D6502
RB520S-30FJTE61
R6534
10
C6519
10u
R6540
6800
R6536
6800
TC LINK
CN6502
8P CN6501
REG_GND 1
KEY_AD5_TC 2
REG_GND 3
I_LTC 4
LDO_3.0V 5
CH7_D_5V 6
O_LTC 7
REG_GND 8
GC-012
CN2002
(PAGE 6-34)
Through the
Flexible Flat Cable
(FFC-194)
1 KEY_AD5_TC
2 REG_GND
3 O_LTC
4 TC_SIG
5 I_LTC
6 REG_GND
CN6503 6P
TS-157
CN9001
(PAGE 6-38)
Through the
Flexible Flat Cable
(FFC-202)
TC-001 BOARD
TC LINK I/O
XX MARK:NO MOUNT
08

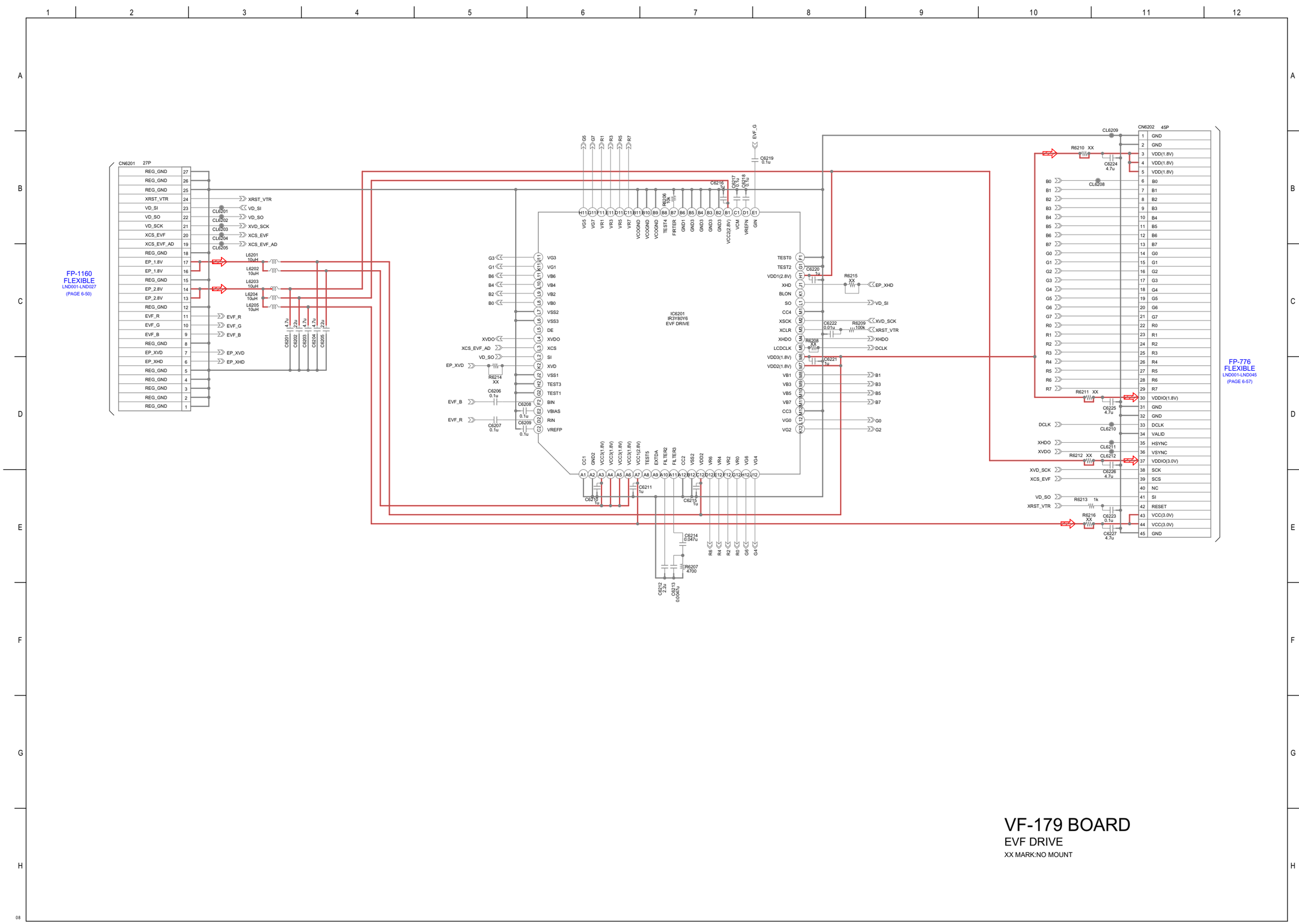
FP-1160
FLEXIBLE
LND001-LND027
(PAGE 6-50)
CN6201 27P
REG_GND 27
REG_GND 26
REG_GND 25
XRST_VTR 24
VD_SI 23
VD_SO 22
VD_SCK 21
XCS_EVF 20
XCS_EVF_AD 19
REG_GND 18
EP_1.8V 17
EP_1.8V 16
REG_GND 15
EP_2.8V 14
EP_2.8V 13
REG_GND 12
EVF_R 11
EVF_G 10
EVF_B 9
REG_GND 8
EP_XVD 7
EP_XHD 6
REG_GND 5
REG_GND 4
REG_GND 3
REG_GND 2
REG_GND 1
XRST_VTR
VD_SI
VD_SO
XVD_SCK
XCS_EVF
XCS_EVF_AD
EVF_R
EVF_G
EVF_B
EP_XVD
EP_XHD
CL6201
CL6202
CL6203
CL6204
CL6205
L6201 10uH
L6202 10uH
L6203 10uH
L6204 10uH
L6205 10uH
C6201 4.7u
C6202 22u
C6203 4.7u
C6204 4.7u
C6205 22u
IC6201
IR3Y80Y6
EVF DRIVE
VG3 VG1 VB6 VB4 VB2 VB0 VSS2 VSS3 DE XVDO XCS SI XVD VSS1 TEST3 TEST1 BIN VBIAS RIN VREFP
XVDO XCS_EVF_AD VD_SO EP_XVD
R6214 XX
C6206 0.1u
C6208 0.1u
C6207 0.1u
C6209 0.1u
EVF_B
EVF_R
G5 G7 R1 R3 R5 R7
VG5 VG7 VR1 VR3 VR5 VR7 VCCGND VCCGND VCCGND TEST4 FRTER GND1 GND3 GND3 GND3 GND3 VCC2(2.8V) VCM VREFN GIN
C6216 1u
C6217 0.1u
C6218 0.1u
R6206 10k
EVF_G
C6219 0.1u
TEST0 TEST2 VDD1(2.8V) XHD BLON SO CC4 XSCK XCLR XHDO LCDCLK VDD3(1.8V) VDD2(1.8V) VB1 VB3 VB5 VB7 CC3 VG0 VG2
C6220 1u
R6215 XX
EP_XHD
VD_SI
C6222 0.01u
R6209 100k
XVD_SCK
XRST_VTR
XHDO
R6208 XX
DCLK
C6221 1u
B1 B3 B5 B7 G0 G2
CC1 GND2 VCC3(1.8V) VCC3(1.8V) VCC3(1.8V) VCC3(1.8V) VCC12(2.8V) TEST5 EXTDA FIL_TER2 FIL_TER3 CC2 VSS2 VDD2 VR6 VR4 VR2 VR0 VG6 VG4
C6210 1u
C6211 1u
C6215 1u
C6214 0.047u
R6207 4700
C6212 22u
C6213 0.047u
R6 R4 R2 R0 G6 G4
CN6202 45P
1 GND
2 GND
3 VDD(1.8V)
4 VDD(1.8V)
5 VDD(1.8V)
6 B0
7 B1
8 B2
9 B3
10 B4
11 B5
12 B6
13 B7
14 G0
15 G1
16 G2
17 G3
18 G4
19 G5
20 G6
21 G7
22 R0
23 R1
24 R2
25 R3
26 R4
27 R5
28 R6
29 R7
30 VDDIO(1.8V)
31 GND
32 GND
33 DCLK
34 VALID
35 HSYNC
36 VSYNC
37 VDDIO(3.0V)
38 SCK
39 SCS
40 NC
41 SI
42 RESET
43 VCC(3.0V)
44 VCC(3.0V)
45 GND
CL6209
R6210 XX
C6224 4.7u
CL6208
R6211 XX
C6225 4.7u
CL6210
CL6211
R6212 XX
CL6212
C6226 4.7u
R6213 1k
R6216 XX
C6223 0.1u
C6227 4.7u
B0 B1 B2 B3 B4 B5 B6 B7 G0 G1 G2 G3 G4 G5 G6 G7 R0 R1 R2 R3 R4 R5 R6 R7
DCLK XHDO XVDO XVD_SCK XCS_EVF VD_SO XRST_VTR
FP-776
FLEXIBLE
LND001-LND045
(PAGE 6-57)
VF-179 BOARD
EVF DRIVE
XX MARK:NO MOUNT

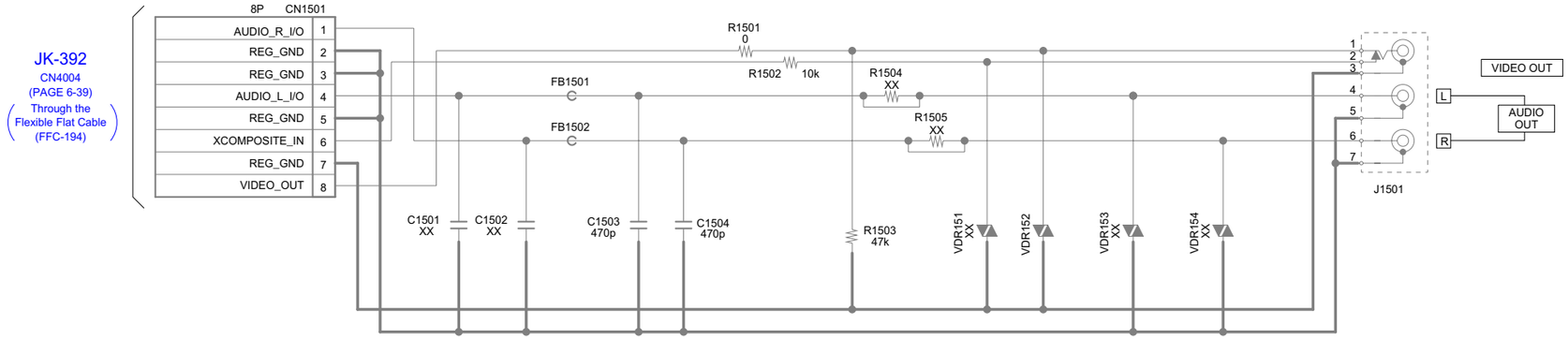

CP-004 BOARD

ANALOG VIDEO, AUDIO OUT

XX MARK:NO MOUNT

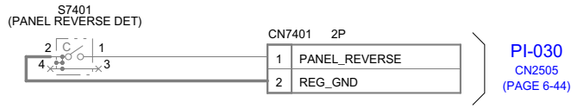

HT-003 BOARD

PANEL REVERSE DET

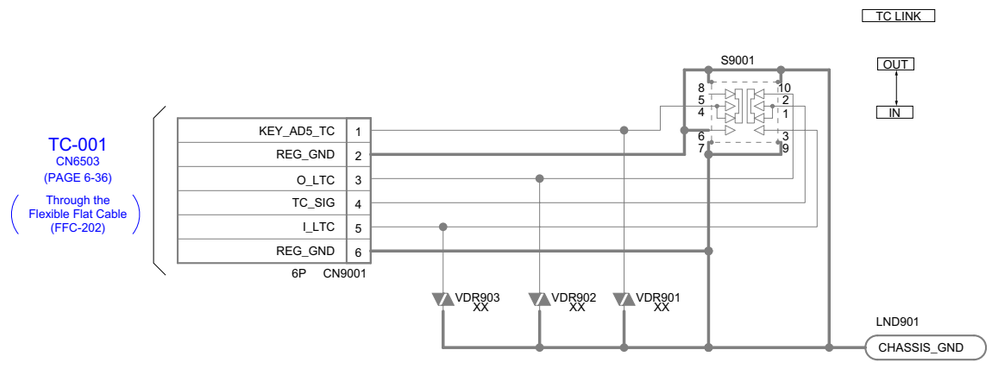

TS-157 BOARD

TC LINK I/O SELECT

XX MARK:NO MOUNT

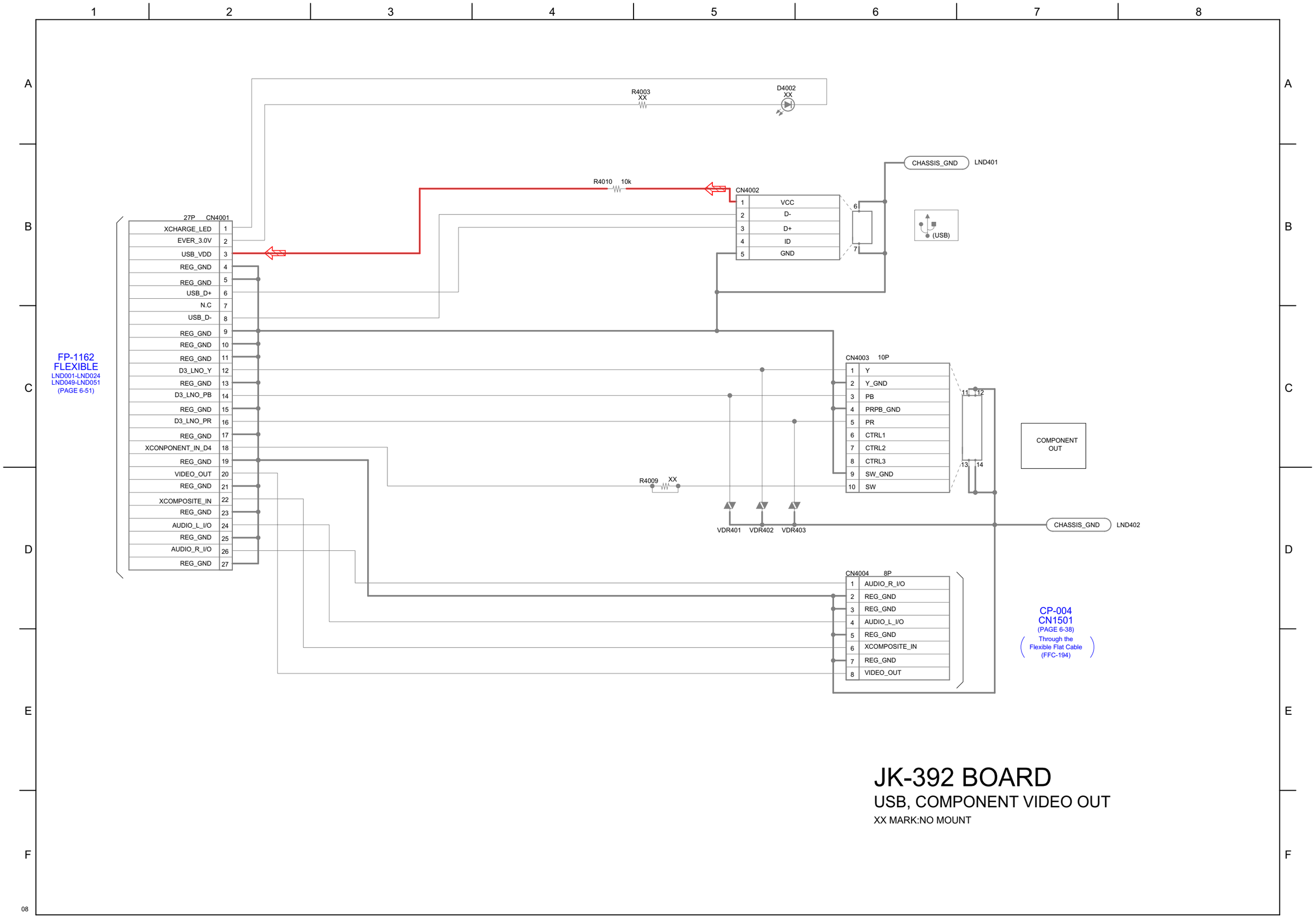
R4003 XX
D4002 XX
R4010 10k
CHASSIS_GND
LND401
CN4002
1 VCC
2 D-
3 D+
4 ID
5 GND
6
7
(USB)
27P CN4001
XCHARGE_LED 1
EVER_3.0V 2
USB_VDD 3
REG_GND 4
REG_GND 5
USB_D+ 6
N.C 7
USB_D- 8
REG_GND 9
REG_GND 10
REG_GND 11
D3_LNO_Y 12
REG_GND 13
D3_LNO_PB 14
REG_GND 15
D3_LNO_PR 16
REG_GND 17
XCONPONENT_IN_D4 18
REG_GND 19
VIDEO_OUT 20
REG_GND 21
XCOMPOSITE_IN 22
REG_GND 23
AUDIO_L_I/O 24
REG_GND 25
AUDIO_R_I/O 26
REG_GND 27
FP-1162
FLEXIBLE
LND001-LND024
LND049-LND051
(PAGE 6-51)
CN4003 10P
1 Y
2 Y_GND
3 PB
4 PRPB_GND
5 PR
6 CTRL1
7 CTRL2
8 CTRL3
9 SW_GND
10 SW
11 12 13 14
COMPONENT OUT
R4009 XX
VDR401 VDR402 VDR403
CHASSIS_GND
LND402
CN4004 8P
1 AUDIO_R_I/O
2 REG_GND
3 REG_GND
4 AUDIO_L_I/O
5 REG_GND
6 XCOMPOSITE_IN
7 REG_GND
8 VIDEO_OUT
CP-004
CN1501
(PAGE 6-38)
Through the
Flexible Flat Cable
(FFC-194)
JK-392 BOARD
USB, COMPONENT VIDEO OUT
XX MARK:NO MOUNT
08

Ver. 1.1 2010.01

The changed portions from Ver. 1.0 are shown in blue.

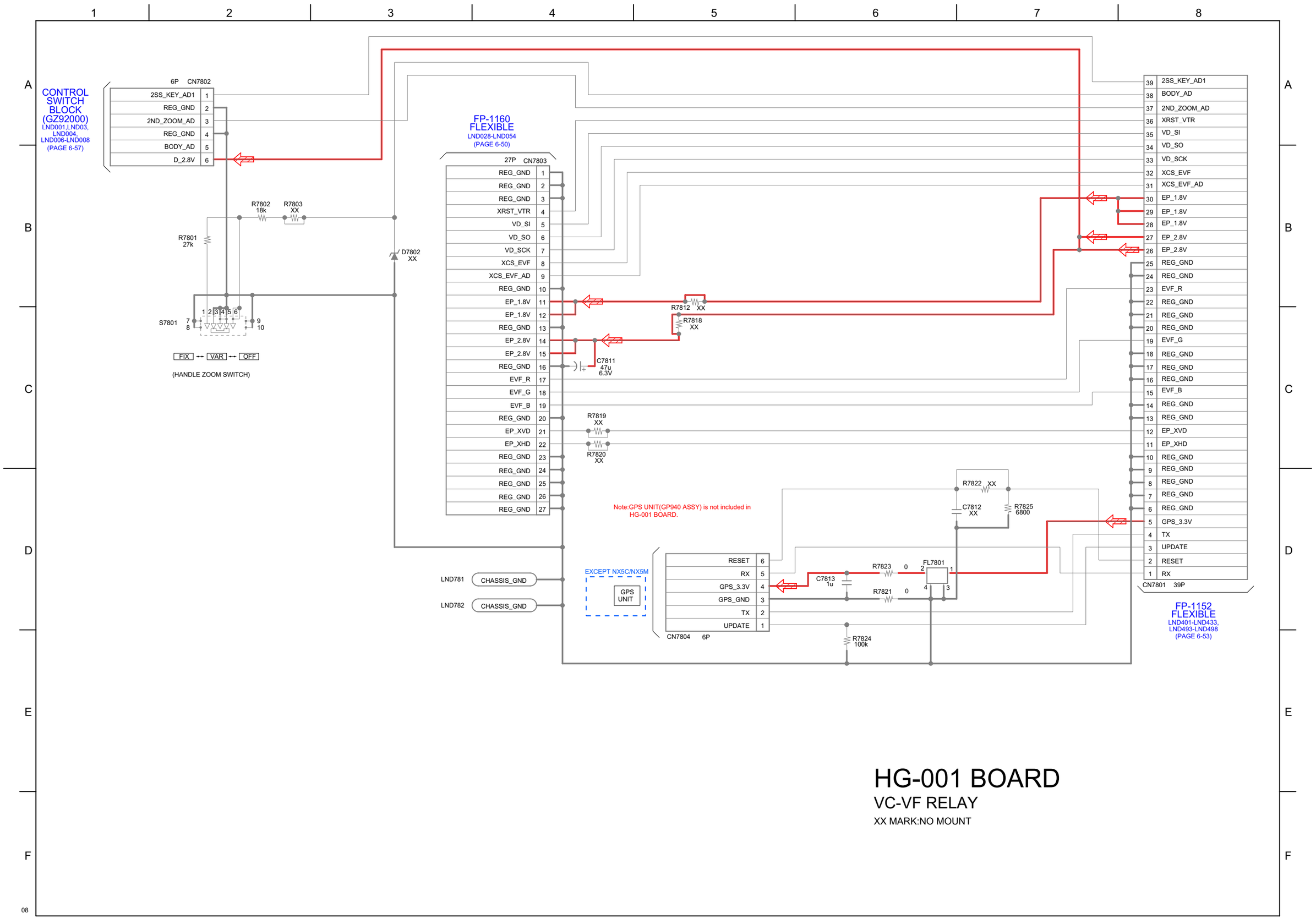

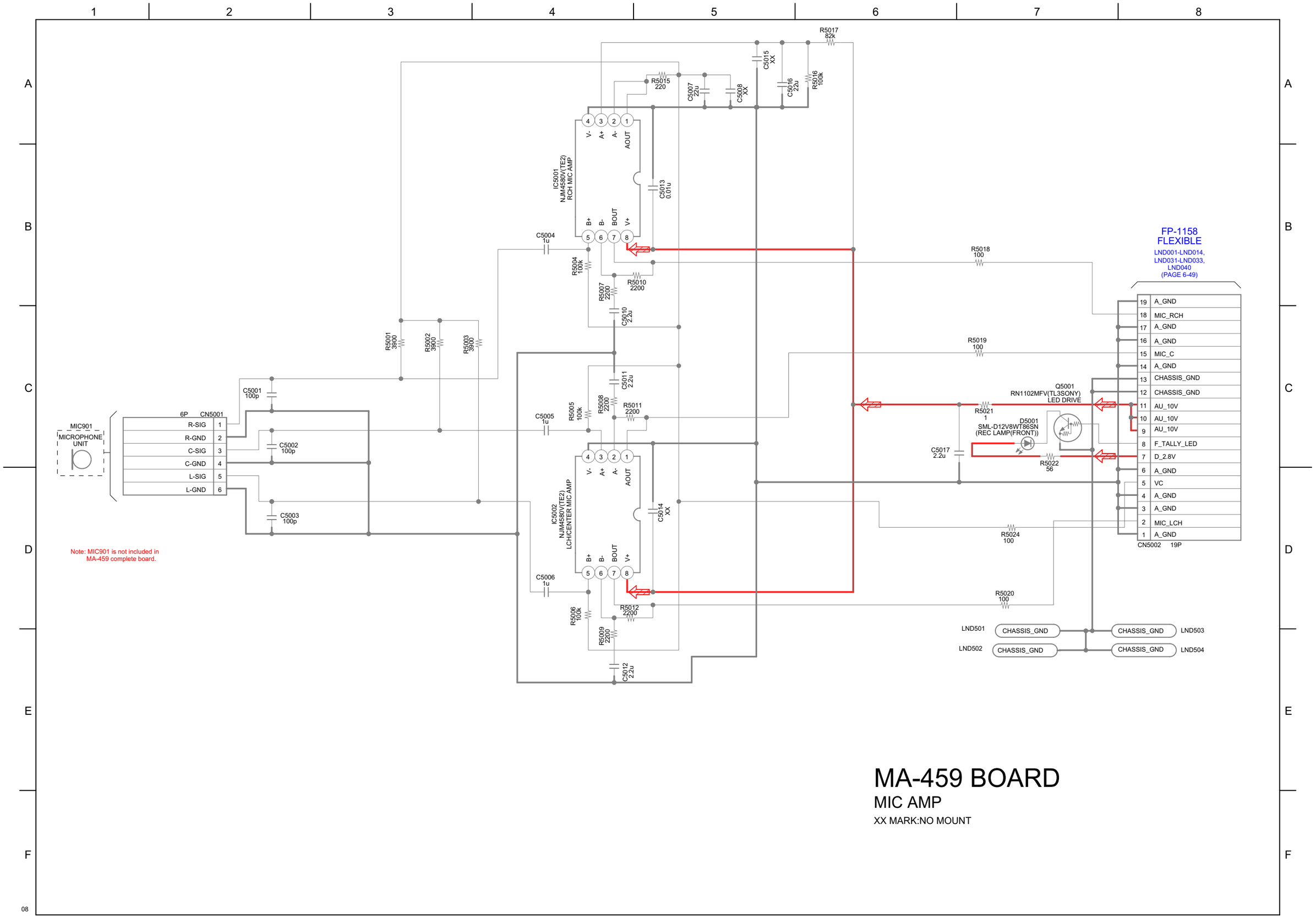
1
2
3
4
5
6
7
8
A
B
C
D
E
F
R5017 82k
R5015 220
C5007 22u
C5008 XX
C5015 XX
C5016 22u
R5016 100k
IC5001 NJM4580V(TE2) RCH MIC AMP
V- A+ A- AOUT
B+ B- BOUT V+
C5013 0.01u
C5004 1u
R5004 100k
R5007 2200
R5010 2200
C5010 2.2u
R5001 3900
R5002 3900
R5003 3900
C5001 100p
C5002 100p
C5003 100p
MIC901 MICROPHONE UNIT
6P CN5001
R-SIG 1
R-GND 2
C-SIG 3
C-GND 4
L-SIG 5
L-GND 6
Note: MIC901 is not included in MA-459 complete board.
C5005 1u
R5005 100k
R5008 2200
R5011 2200
C5011 2.2u
IC5002 NJM4580V(TE2) LCH/CENTER MIC AMP
C5014 XX
C5006 1u
R5006 100k
R5009 2200
R5012 2200
C5012 2.2u
R5018 100
R5019 100
R5020 100
R5024 100
Q5001 RN1102MFV(TL3SONY) LED DRIVE
R5021 1
D5001 SML-D12V8WT86SN (REC LAMP(FRONT))
C5017 2.2u
R5022 56
FP-1158 FLEXIBLE
LND001-LND014, LND031-LND033, LND040 (PAGE 6-49)
19 A_GND
18 MIC_RCH
17 A_GND
16 A_GND
15 MIC_C
14 A_GND
13 CHASSIS_GND
12 CHASSIS_GND
11 AU_10V
10 AU_10V
9 AU_10V
8 F_TALLY_LED
7 D_2.8V
6 A_GND
5 VC
4 A_GND
3 A_GND
2 MIC_LCH
1 A_GND
CN5002 19P
LND501 CHASSIS_GND
LND502 CHASSIS_GND
CHASSIS_GND LND503
CHASSIS_GND LND504
MA-459 BOARD
MIC AMP
XX MARK:NO MOUNT
08

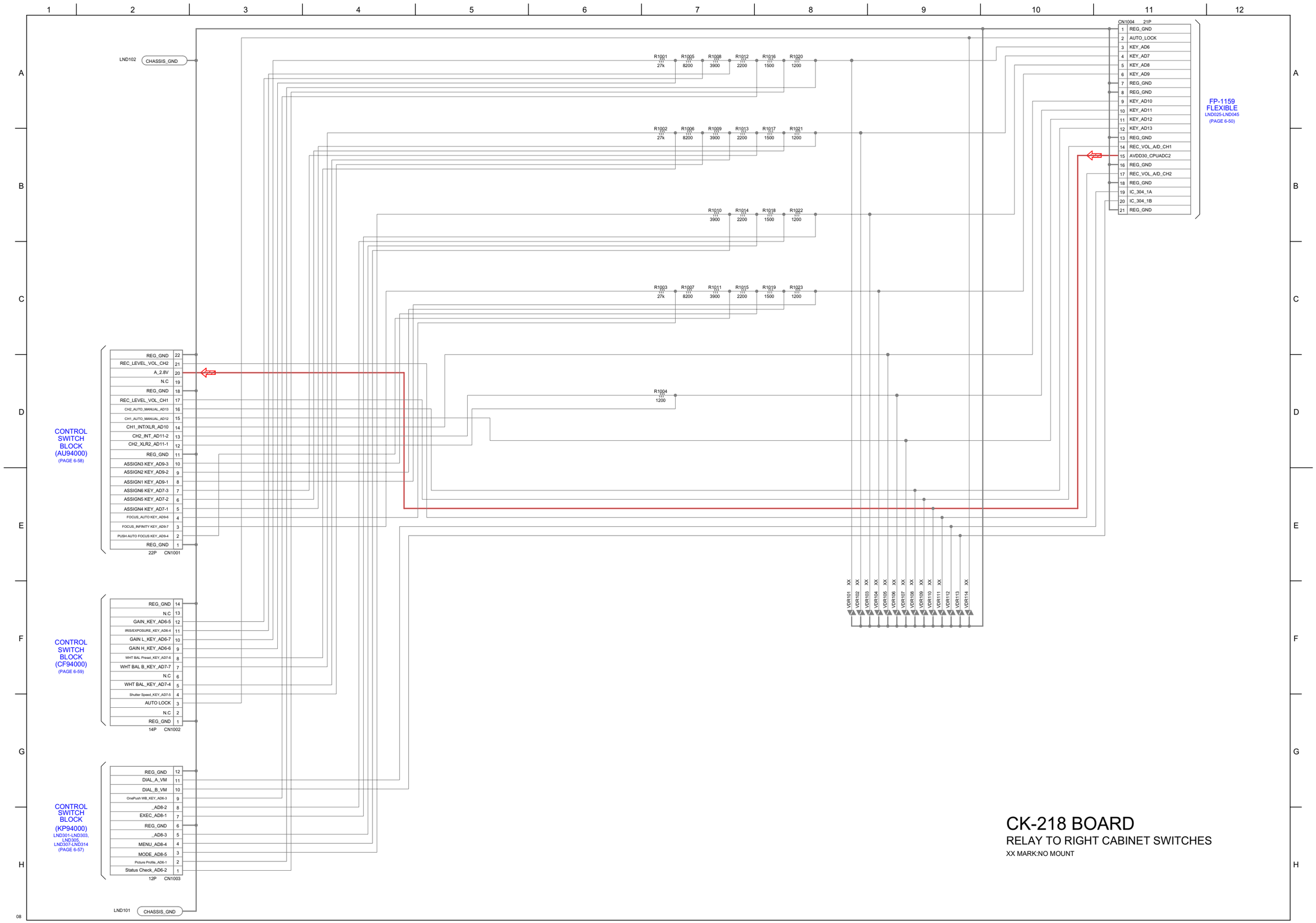
LND102 CHASSIS_GND
R1001 27k
R1005 8200
R1008 3900
R1012 2200
R1016 1500
R1020 1200
R1002 27k
R1006 8200
R1009 3900
R1013 2200
R1017 1500
R1021 1200
R1010 3900
R1014 2200
R1018 1500
R1022 1200
R1003 27k
R1007 8200
R1011 3900
R1015 2200
R1019 1500
R1023 1200
R1004 1200
CN1004 21P
1 REG_GND
2 AUTO_LOCK
3 KEY_AD6
4 KEY_AD7
5 KEY_AD8
6 KEY_AD9
7 REG_GND
8 REG_GND
9 KEY_AD10
10 KEY_AD11
11 KEY_AD12
12 KEY_AD13
13 REG_GND
14 REC_VOL_A/D_CH1
15 AVDD30_CPUADC2
16 REG_GND
17 REC_VOL_A/D_CH2
18 REG_GND
19 IC_304_1A
20 IC_304_1B
21 REG_GND
FP-1159
FLEXIBLE
LND025-LND045
(PAGE 6-50)
CONTROL SWITCH BLOCK (AU94000)
(PAGE 6-58)
REG_GND 22
REC_LEVEL_VOL_CH2 21
A_2.8V 20
N.C 19
REG_GND 18
REC_LEVEL_VOL_CH1 17
CH2_AUTO_MANUAL_AD13 16
CH1_AUTO_MANUAL_AD12 15
CH1_INT/XLR_AD10 14
CH2_INT_AD11-2 13
CH2_XLR2_AD11-1 12
REG_GND 11
ASSIGN3 KEY_AD9-3 10
ASSIGN2 KEY_AD9-2 9
ASSIGN1 KEY_AD9-1 8
ASSIGN6 KEY_AD7-3 7
ASSIGN5 KEY_AD7-2 6
ASSIGN4 KEY_AD7-1 5
FOCUS_AUTO KEY_AD9-6 4
FOCUS_INFINITY KEY_AD9-7 3
PUSH AUTO FOCUS KEY_AD9-4 2
REG_GND 1
22P CN1001
CONTROL SWITCH BLOCK (CF94000)
(PAGE 6-59)
REG_GND 14
N.C 13
GAIN_KEY_AD6-5 12
IRIS/EXPOSURE_KEY_AD6-4 11
GAIN L_KEY_AD6-7 10
GAIN H_KEY_AD6-6 9
WHT BAL Preset_KEY_AD7-6 8
WHT BAL B_KEY_AD7-7 7
N.C 6
WHT BAL_KEY_AD7-4 5
Shutter Speed_KEY_AD7-5 4
AUTO LOCK 3
N.C 2
REG_GND 1
14P CN1002
CONTROL SWITCH BLOCK (KP94000)
LND301-LND303, LND305, LND307-LND314
(PAGE 6-57)
REG_GND 12
DIAL_A_VM 11
DIAL_B_VM 10
OnePush WB_KEY_AD6-3 9
_AD8-2 8
EXEC_AD8-1 7
REG_GND 6
_AD8-3 5
MENU_AD8-4 4
MODE_AD8-5 3
Picture Profile_AD6-1 2
Status Check_AD6-2 1
12P CN1003
LND101 CHASSIS_GND
VDR101 XX
VDR102 XX
VDR103 XX
VDR104 XX
VDR105 XX
VDR106 XX
VDR107 XX
VDR108 XX
VDR109 XX
VDR110 XX
VDR111 XX
VDR112 XX
VDR113 XX
VDR114 XX
CK-218 BOARD
RELAY TO RIGHT CABINET SWITCHES
XX MARK:NO MOUNT

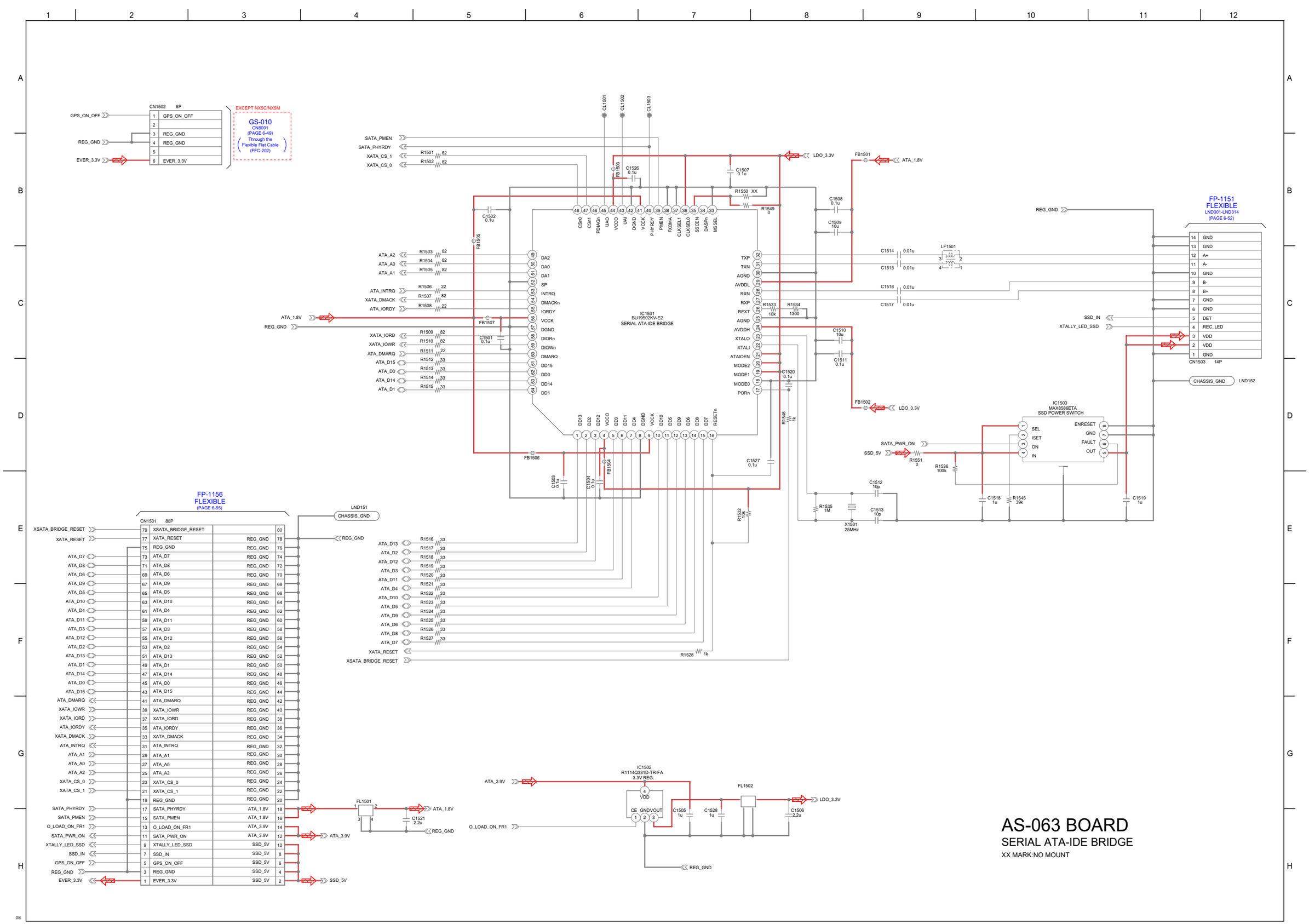
CN1502 6P
GPS_ON_OFF
REG_GND
EVER_3.3V
EXCEPT NX5C/NX5M
GS-010
CN8001
(PAGE 6-49)
Through the Flexible Flat Cable (FFC-202)
IC1501
BU19502KV-E2
SERIAL ATA-IDE BRIDGE
IC1503
MAX8586ETA
SSD POWER SWITCH
IC1502
R1114Q331D-TR-FA
3.3V REG.
FP-1151
FLEXIBLE
LND301-LND314
(PAGE 6-52)
CN1503 14P
FP-1156
FLEXIBLE
(PAGE 6-55)
CN1501 80P
X1501
25MHz
AS-063 BOARD
SERIAL ATA-IDE BRIDGE
XX MARK:NO MOUNT

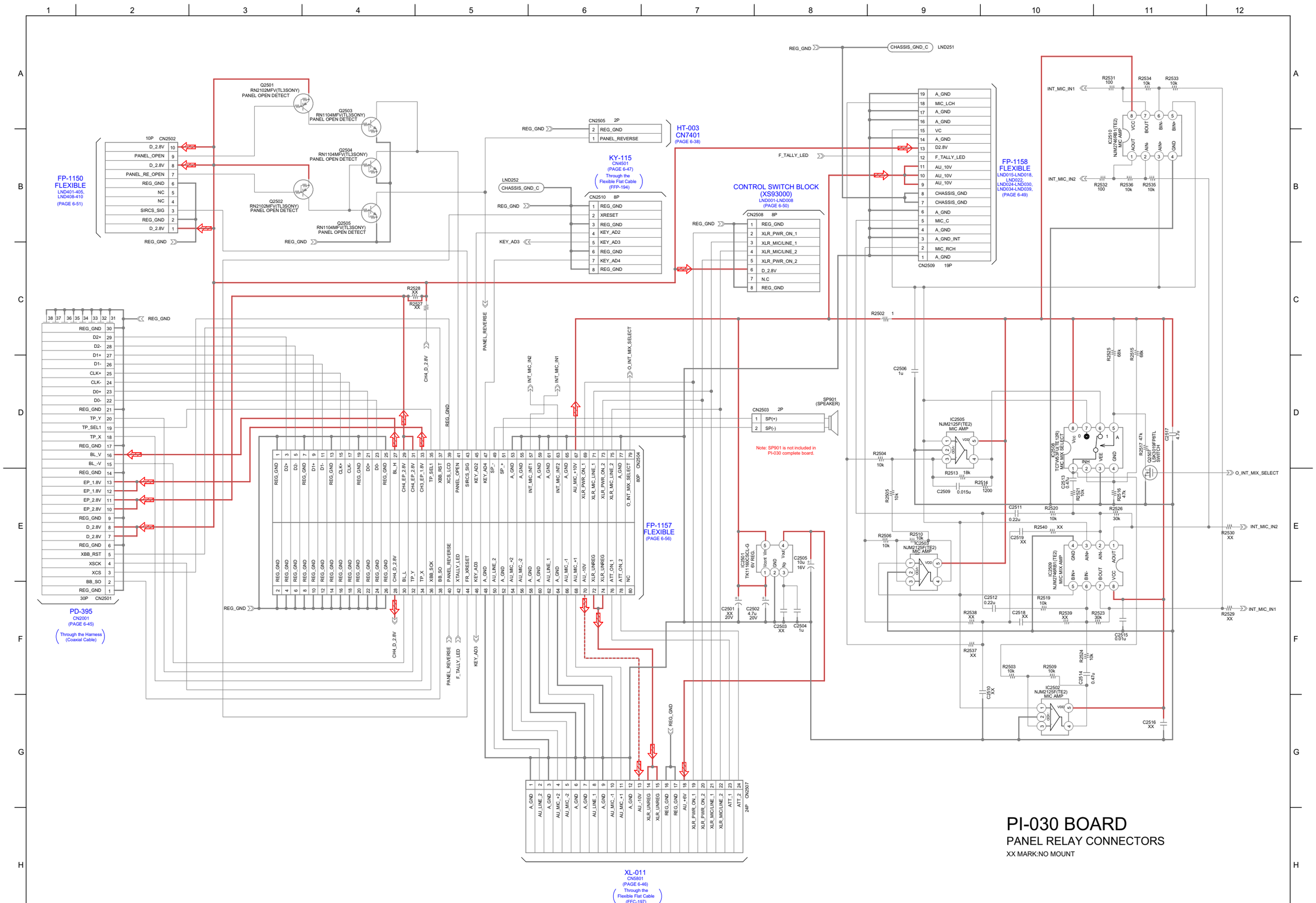
PI-030 BOARD
PANEL RELAY CONNECTORS
XX MARK:NO MOUNT
FP-1150 FLEXIBLE
LND401-405, LND408-410
(PAGE 6-51)
10P CN2502
D_2.8V 10
PANEL_OPEN 9
D_2.8V 8
PANEL_RE_OPEN 7
REG_GND 6
NC 5
NC 4
SIRCS_SIG 3
REG_GND 2
D_2.8V 1
Q2501 RN2102MFV(TL3SONY) PANEL OPEN DETECT
Q2503 RN1104MFV(TL3SONY) PANEL OPEN DETECT
Q2504 RN1104MFV(TL3SONY) PANEL OPEN DETECT
Q2502 RN2102MFV(TL3SONY) PANEL OPEN DETECT
Q2505 RN1104MFV(TL3SONY) PANEL OPEN DETECT
HT-003 CN7401 (PAGE 6-38)
CN2505 2P
REG_GND 2
PANEL_REVERSE 1
KY-115 CN4501 (PAGE 6-47) Through the Flexible Flat Cable (FFP-194)
LND252
CHASSIS_GND_C
CN2510 8P
REG_GND 1
XRESET 2
REG_GND 3
KEY_AD2 4
KEY_AD3 5
REG_GND 6
KEY_AD4 7
REG_GND 8
CONTROL SWITCH BLOCK (XS93000) LND001-LND008 (PAGE 6-50)
CN2508 8P
REG_GND 1
XLR_PWR_ON_1 2
XLR_MIC/LINE_1 3
XLR_MIC/LINE_2 4
XLR_PWR_ON_2 5
D_2.8V 6
N.C 7
REG_GND 8
CHASSIS_GND_C LND251
FP-1158 FLEXIBLE LND015-LND018, LND022, LND024-LND030, LND034-LND039, (PAGE 6-49)
CN2509 19P
19 A_GND
18 MIC_LCH
17 A_GND
16 A_GND
15 VC
14 A_GND
13 D2.8V
12 F_TALLY_LED
11 AU_10V
10 AU_10V
9 AU_10V
8 CHASSIS_GND
7 CHASSIS_GND
6 A_GND
5 MIC_C
4 A_GND
3 A_GND_INT
2 MIC_RCH
1 A_GND
INT_MIC_IN1
INT_MIC_IN2
IC2510 NJM2746RB1(TE2) MIC AMP
IC2505 NJM2125F(TE2) MIC AMP
IC2507 NJM2746RB1(TE2) MIC AMP
IC2502 NJM2125F(TE2) MIC AMP
IC2506 TC7WB53FU(TE12R) MIC MIX SELECT
IC2501 TK11160CSCL-G 6V REG
SP901 (SPEAKER)
CN2503 2P
SP(+) 1
SP(-) 2
Note: SP901 is not included in PI-030 complete board.
PD-395 CN2001 (PAGE 6-45) Through the Harness (Coaxial Cable)
30P CN2501
REG_GND 1
BB_SO 2
BB_BCK 3
REG_GND 4
D2+ 5
D2- 6
REG_GND 7
D1+ 8
D1- 9
REG_GND 10
CLK+ 11
CLK- 12
REG_GND 13
D0+ 14
D0- 15
REG_GND 16
TP_Y 17
TP_SEL1 18
TP_X 19
REG_GND 20
BL_V 21
BL_-V 22
REG_GND 23
EP_1.8V 24
EP_1.8V 25
EP_2.8V 26
EP_2.8V 27
REG_GND 28
D_2.8V 29
D_2.8V 30
REG_GND 31
XBB_RST 32
XSCK 33
XCS 34
BB_SO 35
REG_GND 36
FP-1157 FLEXIBLE (PAGE 6-56)
80P CN2504
REG_GND 1
REG_GND 2
D2+ 3
REG_GND 4
D2- 5
REG_GND 6
REG_GND 7
D1+ 8
REG_GND 9
D1- 10
REG_GND 11
REG_GND 12
CLK+ 13
REG_GND 14
CLK- 15
REG_GND 16
REG_GND 17
D0+ 18
REG_GND 19
D0- 20
REG_GND 21
REG_GND 22
BL_H 23
REG_GND 24
CH4_D_2.8V 25
CH4_EP_2.8V 26
BL_L 27
CH4_EP_2.8V 28
TP_-Y 29
CH3_EP_1.8V 30
TP_X 31
TP_SEL1 32
XBB_SCK 33
XBB_RST 34
BB_SO 35
XCS_LCD 36
PANEL_REVERSE 37
PANEL_OPEN 38
XTALLY_LED 39
SRCS_SIG 40
FR_XRESET 41
KEY_AD2 42
KEY_AD3 43
KEY_AD4 44
A_GND 45
AU_LINE_2 46
A_GND 47
AU_MIC_+2 48
SP_-* 49
SP_+* 50
A_GND 51
A_GND 52
INT_MIC_INT1 53
A_GND 54
INT_MIC_INT2 55
A_GND 56
AU_MIC_+10V 57
XLR_PWR_ON_1 58
XLR_MIC_LINE_1 59
XLR_PWR_ON_2 60
XLR_MIC_LINE_2 61
O_INT_MIX_SELECT 62
A_GND 63
REG_GND
CH4_D_2.8V
PANEL_REVERSE
F_TALLY_LED
KEY_AD3
XL-011 CN5801 (PAGE 6-46) Through the Flexible Flat Cable (FFC-197)
24P CN2507
A_GND 1
AU_LINE_2 2
A_GND 3
AU_MIC_+2 4
AU_MIC_-2 5
A_GND 6
A_GND 7
AU_LINE_1 8
A_GND 9
AU_MIC_-1 10
AU_MIC_+1 11
A_GND 12
AU_-10V 13
XLR_UNREG 14
XLR_UNREG 15
REG_GND 16
REG_GND 17
AU_+6V 18
XLR_PWR_ON_1 19
XLR_PWR_ON_2 20
XLR_MC/LINE_1 21
XLR_MC/LINE_2 22
ATT_1 23
ATT_2 24
INT_MIC_IN2
INT_MIC_IN1
O_INT_MIX_SELECT
REG_GND
R2528 XX
R2527 XX
R2502 1
C2506 1u
R2504 10k
R2505 10k
R2506 10k
R2510 10k
R2513 18k
R2514 1200
C2509 0.015u
C2511 0.22u
R2520 10k
R2526 30k
R2540 XX
C2519 XX
C2512 0.22u
R2519 10k
R2538 XX
C2518 XX
R2539 XX
R2523 30k
C2515 0.01u
R2537 XX
R2503 10k
R2509 10k
R2524 10k
C2514 0.47u
C2510 XX
C2516 XX
C2501 XX 20V
C2502 4.7u 20V
C2503 XX
C2504 1u
C2505 10u 16V
R2531 100
R2534 10k
R2533 10k
R2532 100
R2536 10k
R2535 10k
R2525 68k
R2515 68k
R2517 47k
C2507 0.47u
C2517 4.7u
R2521 10k
R2516 47k
C2513 0.47u
R2530 XX
R2529 XX

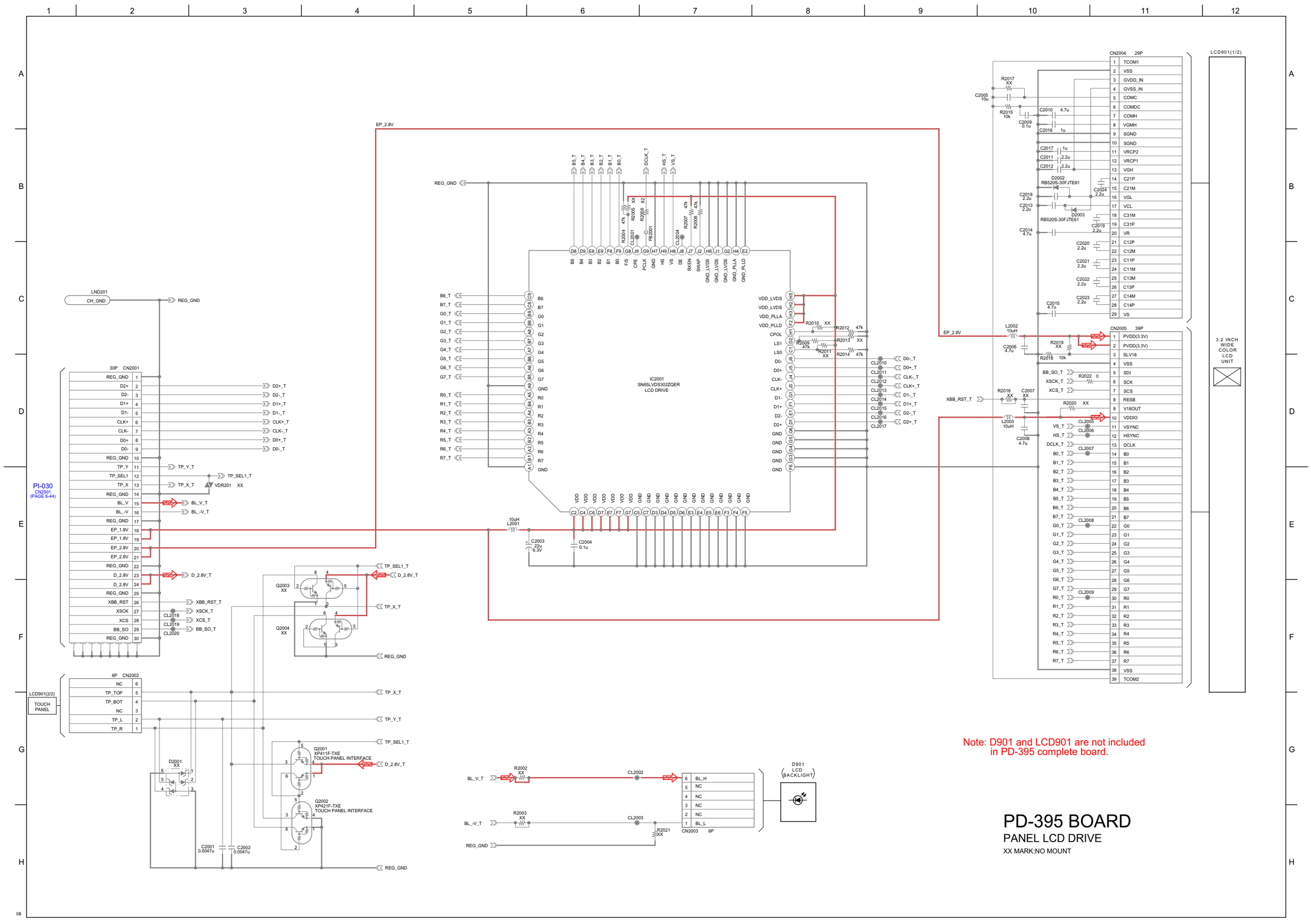
LND201
CH_GND
REG_GND
30P CN2001
REG_GND 1
D2+ 2
D2- 3
D1+ 4
D1- 5
CLK+ 6
CLK- 7
D0+ 8
D0- 9
REG_GND 10
TP_Y 11
TP_SEL1 12
TP_X 13
REG_GND 14
BL_V 15
BL_-V 16
REG_GND 17
EP_1.8V 18
EP_1.8V 19
EP_2.8V 20
EP_2.8V 21
REG_GND 22
D_2.8V 23
D_2.8V 24
REG_GND 25
XBB_RST 26
XSCK 27
XCS 28
BB_SO 29
REG_GND 30
D2+_T
D2-_T
D1+_T
D1-_T
CLK+_T
CLK-_T
D0+_T
D0-_T
TP_Y_T
TP_SEL1_T
TP_X_T
VDR201 XX
BL_V_T
BL_-V_T
PI-030
CN2501
(PAGE 6-44)
EP_2.8V
B5_T B4_T B3_T B2_T B1_T B0_T DCLK_T HS_T VS_T
REG_GND
R2005 XX
R2006 82
R2004 47k
R2007 47k
R2008 47k
CL2001
FB2001
CL2004
D8 D9 E8 E9 F8 F9 G8 J9 G9 H7 H9 H8 J8 J7 J2 H6 J1 G2 H4 E2
B5 B4 B3 B2 B1 B0 FS CPE PCLK GND HS VS DE RXEN SWAP GND_LVDS GND_LVDS GND_LVDS GND_PLLA GND_PLLD
B6_T B7_T G0_T G1_T G2_T G3_T G4_T G5_T G6_T G7_T
C9 C8 B9 B8 A9 B7 A8 B6 A7 B5 A6 B4 A5 B3 A4 B2 A3 B1 A2 A1
B6 B7 G0 G1 G2 G3 G4 G5 G6 G7 GND
R0_T R1_T R2_T R3_T R4_T R5_T R6_T R7_T
R0 R1 R2 R3 R4 R5 R6 R7 GND
IC2001
SN65LVDS302ZQER
LCD DRIVE
VDD_LVDS VDD_LVDS VDD_PLLA VDD_PLLD CPOL LS1 LS0 D0- D0+ CLK- CLK+ D1- D1+ D2- D2+ GND GND GND GND GND
H5 H2 H3 F2 H1 D2 C1 J8 J5 J4 J3 G1 F1 E1 D1 G6 G5 G4 G3 F6
R2010 XX
R2012 47k
R2009 47k
R2013 XX
R2011 XX
R2014 47k
CL2010 CL2011 CL2012 CL2013 CL2014 CL2015 CL2016 CL2017
D0-_T D0+_T CLK-_T CLK+_T D1-_T D1+_T D2-_T D2+_T
VDD VDD VDD VDD VDD VDD VDD GND GND GND GND GND GND GND GND GND GND
C2 C4 C6 D7 E7 F7 G7 C5 C7 D3 D4 D5 D6 E3 E4 E5 E6 F3 F4 F5
10uH L2001
C2003 22u 6.3V
C2004 0.1u
CN2004 29P
1 TCOM1
2 VSS
3 GVDD_IN
4 GVSS_IN
5 COMC
6 COMDC
7 COMH
8 VGMH
9 SGND
10 SGND
11 VRCP2
12 VRCP1
13 VGH
14 C21P
15 C21M
16 VGL
17 VCL
18 C31M
19 C31P
20 VR
21 C12P
22 C12M
23 C11P
24 C11M
25 C13M
26 C13P
27 C14M
28 C14P
29 VS
R2017 XX
C2005 10u
R2015 10k
C2010 4.7u
C2009 0.1u
C2016 1u
C2017 1u
C2011 2.2u
C2012 2.2u
D2002 RB520S-30FJTE61
C2024 2.2u
C2018 2.2u
C2013 2.2u
D2003 RB520S-30FJTE61
C2019 2.2u
C2014 4.7u
C2020 2.2u
C2021 2.2u
C2022 2.2u
C2023 2.2u
C2015 4.7u
EP_2.8V
L2002 10uH
C2006 4.7u
R2019 XX
R2018 10k
CN2005 39P
1 PVDD(3.3V)
2 PVDD(3.3V)
3 SLV18
4 VSS
5 SDI
6 SCK
7 SCS
8 RESB
9 V18OUT
10 VDDIO
11 VSYNC
12 HSYNC
13 DCLK
14 B0
15 B1
16 B2
17 B3
18 B4
19 B5
20 B6
21 B7
22 G0
23 G1
24 G2
25 G3
26 G4
27 G5
28 G6
29 G7
30 R0
31 R1
32 R2
33 R3
34 R4
35 R5
36 R6
37 R7
38 VSS
39 TCOM2
BB_SO_T
XSCK_T
XCS_T
R2022 0
XBB_RST_T
R2016 XX
C2007 XX
R2020 XX
L2003 10uH
C2008 4.7u
CL2005
CL2006
CL2007
CL2008
CL2009
VS_T
HS_T
DCLK_T
B0_T B1_T B2_T B3_T B4_T B5_T B6_T B7_T G0_T G1_T G2_T G3_T G4_T G5_T G6_T G7_T R0_T R1_T R2_T R3_T R4_T R5_T R6_T R7_T
LCD901(1/2)
3.2 INCH WIDE COLOR LCD UNIT
6P CN2002
LCD901(2/2)
TOUCH PANEL
NC 6
TP_TOP 5
TP_BOT 4
NC 3
TP_L 2
TP_R 1
TP_X_T
TP_Y_T
TP_SEL1_T
D_2.8V_T
Q2003 XX
Q2004 XX
REG_GND
D2001 XX
Q2001 XP411F-TXE TOUCH PANEL INTERFACE
Q2002 XP421F-TXE TOUCH PANEL INTERFACE
C2001 0.0047u
C2002 0.0047u
BL_V_T
BL_-V_T
R2002 XX
R2003 XX
CL2002
CL2003
R2021 XXX
CN2003 6P
6 BL_H
5 NC
4 NC
3 NC
2 NC
1 BL_L
D901 LCD (BACKLIGHT)
Note: D901 and LCD901 are not included in PD-395 complete board.
PD-395 BOARD
PANEL LCD DRIVE
XX MARK:NO MOUNT

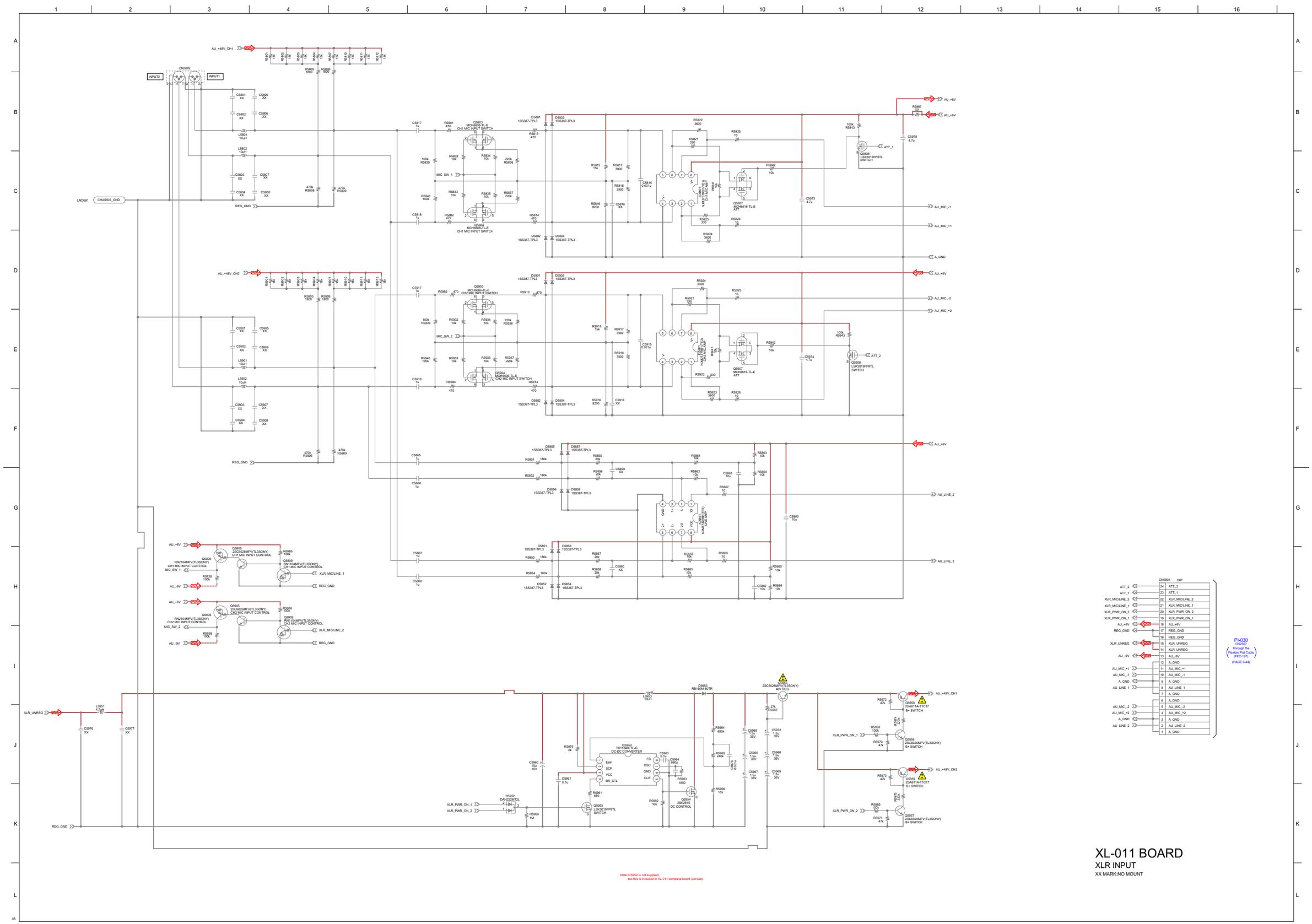
AU_+48V_CH1
AU_+48V_CH2
INPUT2
INPUT1
CN5802
LND581
CHASSIS_GND
REG_GND
MIC_SW_1
MIC_SW_2
AU_+6V
AU_-9V
A_GND
AU_MIC_-1
AU_MIC_+1
AU_MIC_-2
AU_MIC_+2
AU_LINE_2
AU_LINE_1
XLR_MIC/LINE_1
XLR_MIC/LINE_2
XLR_UNREG
XLR_PWR_ON_1
XLR_PWR_ON_2
ATT_1
ATT_2
Q5803 MCH6606-TL-E CH1 MIC INPUT SWITCH
Q5804 MCH6606-TL-E CH1 MIC INPUT SWITCH
Q5903 MCH6606-TL-E CH2 MIC INPUT SWITCH
Q5904 MCH6606-TL-E CH2 MIC INPUT SWITCH
Q5901 NJM2755M(TE2) CH1/MIC AMP
Q5902 NJM2755M(TE2) CH2/MIC AMP
Q5807 MCH6616-TL-E ATT
Q5907 MCH6616-TL-E ATT
Q5808 LSK3019FP8TL SWITCH
Q5908 LSK3019FP8TL SWITCH
Q5805 2SC6026MFV(TL3SONY) CH1 MIC INPUT CONTROL
Q5806 RN2104MFV(TL3SONY) CH1 MIC INPUT CONTROL
Q5809 RN1104MFV(TL3SONY) CH1 MIC INPUT CONTROL
Q5905 2SC6026MFV(TL3SONY) CH2 MIC INPUT CONTROL
Q5906 RN2104MFV(TL3SONY) CH2 MIC INPUT CONTROL
Q5909 RN1104MFV(TL3SONY) CH2 MIC INPUT CONTROL
IC5952 TK11840LTL-G DC-DC CONVERTER
Q5953 LSK3019FP8TL SWITCH
Q5954 2SK2615 DC CONTROL
Q5955 2SC6026MFV(TL3SONY) 48V REG.
Q5956 2SA811A-TX(Y7 B+ SWITCH
Q5966 2SC6026MFV(TL3SONY) B+ SWITCH
Q5957 2SA811A-TX(Y7 B+ SWITCH
Q5967 2SC6026MFV(TL3SONY) B+ SWITCH
D5953 RB160M-60TR
D5952 DAN222M73
CN5801 24P
PI-030 CN2507 Through the Flexible Flat Cable (FFC-197) (PAGE 6-44)
Note:IC5952 is not supplied, but this is included in XL-011 complete board (service).
XL-011 BOARD
XLR INPUT
XX MARK:NO MOUNT

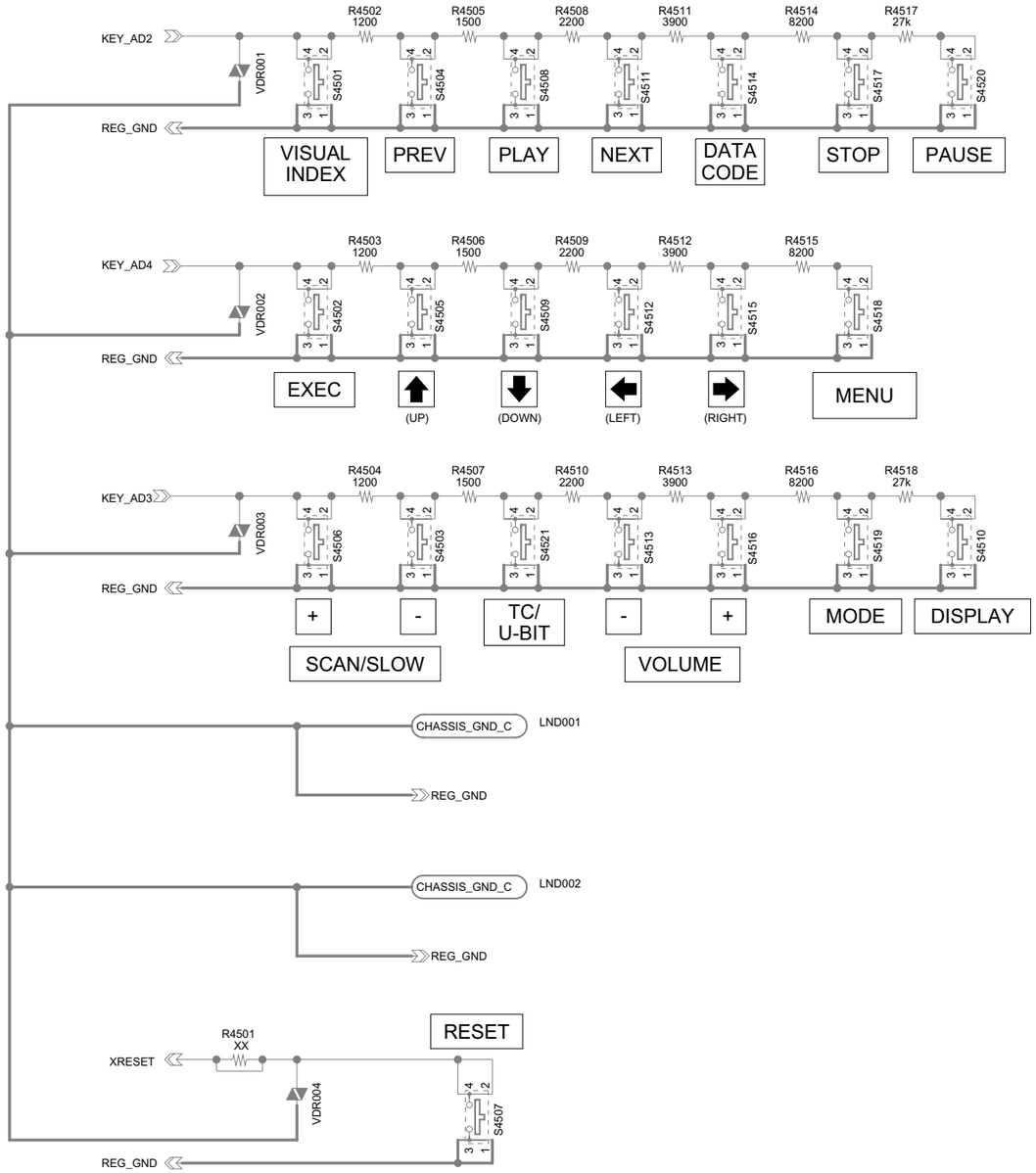

PI-030
CN2510
(PAGE 6-44)
Through the Flexible Flat Cable (FFC-194)

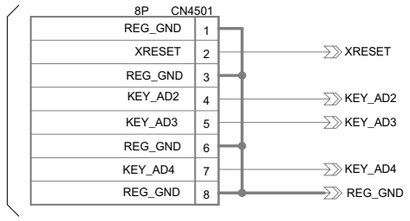

KY-115 BOARD

TOP PANEL SWITCHES

XX MARK:NO MOUNT

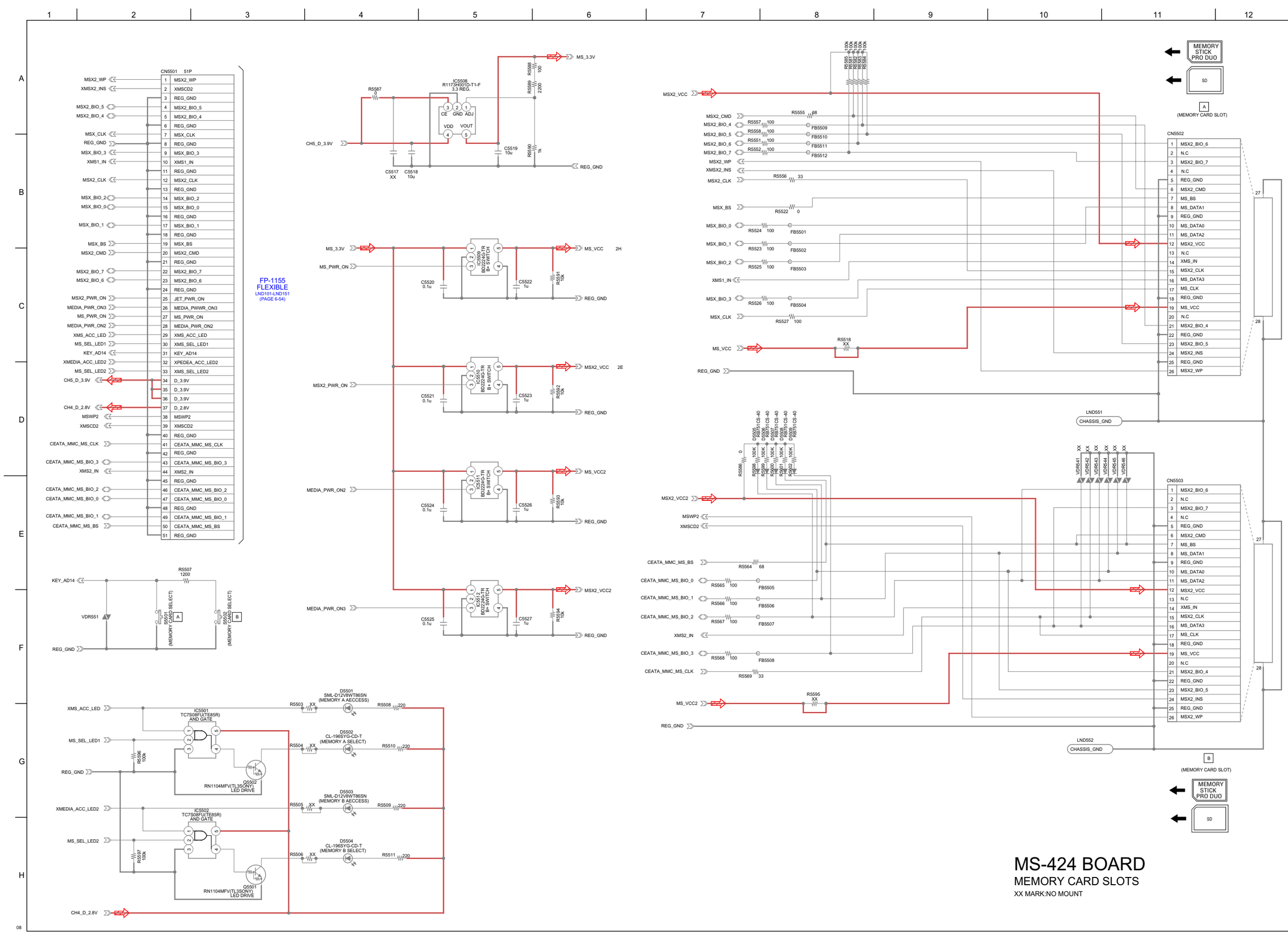
CN5501 51P
1 MSX2_WP
2 XMSCD2
3 REG_GND
4 MSX2_BIO_5
5 MSX2_BIO_4
6 REG_GND
7 MSX_CLK
8 REG_GND
9 MSX_BIO_3
10 XMS1_IN
11 REG_GND
12 MSX2_CLK
13 REG_GND
14 MSX_BIO_2
15 MSX_BIO_0
16 REG_GND
17 MSX_BIO_1
18 REG_GND
19 MSX_BS
20 MSX2_CMD
21 REG_GND
22 MSX2_BIO_7
23 MSX2_BIO_6
24 REG_GND
25 JET_PWR_ON
26 MEDIA_PWWR_ON3
27 MS_PWR_ON
28 MEDIA_PWR_ON2
29 XMS_ACC_LED
30 XMS_SEL_LED1
31 KEY_AD14
32 XPEDEA_ACC_LED2
33 XMS_SEL_LED2
34 D_3.9V
35 D_3.9V
36 D_3.9V
37 D_2.8V
38 MSWP2
39 XMSCD2
40 REG_GND
41 CEATA_MMC_MS_CLK
42 REG_GND
43 CEATA_MMC_MS_BIO_3
44 XMS2_IN
45 REG_GND
46 CEATA_MMC_MS_BIO_2
47 CEATA_MMC_MS_BIO_0
48 REG_GND
49 CEATA_MMC_MS_BIO_1
50 CEATA_MMC_MS_BS
51 REG_GND
CH5_D_3.9V
CH4_D_2.8V
FP-1155
FLEXIBLE
LND101-LND151
(PAGE 6-54)
IC5508
R1173H001D-T1-F
3.3 REG.
CE GND ADJ
VDD VOUT
R5587 0
R5588 100
R5589 2200
R5590 1k
C5517 XX
C5518 10u
C5519 10u
MS_3.3V
REG_GND
IC5509
IC5510
IC5511
IC5512
BD2244G-TR
B+ SWITCH
MS_PWR_ON
MSX2_PWR_ON
MEDIA_PWR_ON2
MEDIA_PWR_ON3
C5520 0.1u
C5521 0.1u
C5522 1u
C5523 1u
C5524 0.1u
C5525 0.1u
C5526 1u
C5527 1u
R5591 10k
R5592 10k
R5593 10k
R5594 10k
MS_VCC 2H
MSX2_VCC 2E
MS_VCC2
MSX2_VCC2
R5507 1200
KEY_AD14
VDR551
IC5501
RS01
(MEMORY CARD SELECT)
A
IC5502
S502
B
XMS_ACC_LED
MS_SEL_LED1
XMEDIA_ACC_LED2
MS_SEL_LED2
IC5501
TC7S08FU(TE85R)
AND GATE
IC5502
TC7S08FU(TE85R)
AND GATE
R5596 100k
R5597 100k
Q5502
Q5501
RN1104MFV(TL3SONY)
LED DRIVE
D5501
SML-D12V8WT86SN
(MEMORY A AECCESS)
D5502
CL-196SYG-CD-T
(MEMORY A SELECT)
D5503
SML-D12V8WT86SN
(MEMORY B AECCESS)
D5504
CL-196SYG-CD-T
(MEMORY B SELECT)
R5503 XX
R5504 XX
R5505 XX
R5506 XX
R5508 220
R5510 220
R5509 220
R5511 220
MSX2_VCC
MSX2_CMD
MSX2_BIO_4
MSX2_BIO_5
MSX2_BIO_6
MSX2_BIO_7
MSX2_WP
XMSX2_INS
MSX2_CLK
MSX_BS
MSX_BIO_0
MSX_BIO_1
MSX_BIO_2
XMS1_IN
MSX_BIO_3
MSX_CLK
MS_VCC
REG_GND
R5555 68
R5557 100
R5558 100
R5551 100
R5552 100
R5556 33
R5522 0
R5524 100
R5523 100
R5525 100
R5526 100
R5527 100
FB5509
FB5510
FB5511
FB5512
FB5501
FB5502
FB5503
FB5504
R5518 XX
R5585 100k
R5586 100k
R5587 100k
R5583 100k
R5584 100k
MEMORY STICK PRO DUO
SD
A
(MEMORY CARD SLOT)
CN5502
1 MSX2_BIO_6
2 N.C
3 MSX2_BIO_7
4 N.C
5 REG_GND
6 MSX2_CMD
7 MS_BS
8 MS_DATA1
9 REG_GND
10 MS_DATA0
11 MS_DATA2
12 MSX2_VCC
13 N.C
14 XMS_IN
15 MSX2_CLK
16 MS_DATA3
17 MS_CLK
18 REG_GND
19 MS_VCC
20 N.C
21 MSX2_BIO_4
22 REG_GND
23 MSX2_BIO_5
24 MSX2_INS
25 REG_GND
26 MSX2_WP
27
28
LND551
CHASSIS_GND
D5505 RB751CS-40
D5506 RB751CS-40
D5507 RB751CS-40
D5508 RB751CS-40
D5509 RB751CS-40
R5596 0
R5598 100K
R5599 100K
R5600 100K
R5601 100K
R5602 100K
VDR541 XX
VDR542 XX
VDR543 XX
VDR544 XX
VDR545 XX
VDR546 XX
CN5503
1 MSX2_BIO_6
2 N.C
3 MSX2_BIO_7
4 N.C
5 REG_GND
6 MSX2_CMD
7 MS_BS
8 MS_DATA1
9 REG_GND
10 MS_DATA0
11 MS_DATA2
12 MSX2_VCC
13 N.C
14 XMS_IN
15 MSX2_CLK
16 MS_DATA3
17 MS_CLK
18 REG_GND
19 MS_VCC
20 N.C
21 MSX2_BIO_4
22 REG_GND
23 MSX2_BIO_5
24 MSX2_INS
25 REG_GND
26 MSX2_WP
27
28
MSX2_VCC2
MSWP2
XMSCD2
CEATA_MMC_MS_BS
CEATA_MMC_MS_BIO_0
CEATA_MMC_MS_BIO_1
CEATA_MMC_MS_BIO_2
XMS2_IN
CEATA_MMC_MS_BIO_3
CEATA_MMC_MS_CLK
MS_VCC2
REG_GND
R5564 68
R5565 100
R5566 100
R5567 100
R5568 100
R5569 33
R5595 XX
FB5505
FB5506
FB5507
FB5508
LND552
CHASSIS_GND
B
(MEMORY CARD SLOT)
MEMORY STICK PRO DUO
SD
MS-424 BOARD
MEMORY CARD SLOTS
XX MARK:NO MOUNT
08

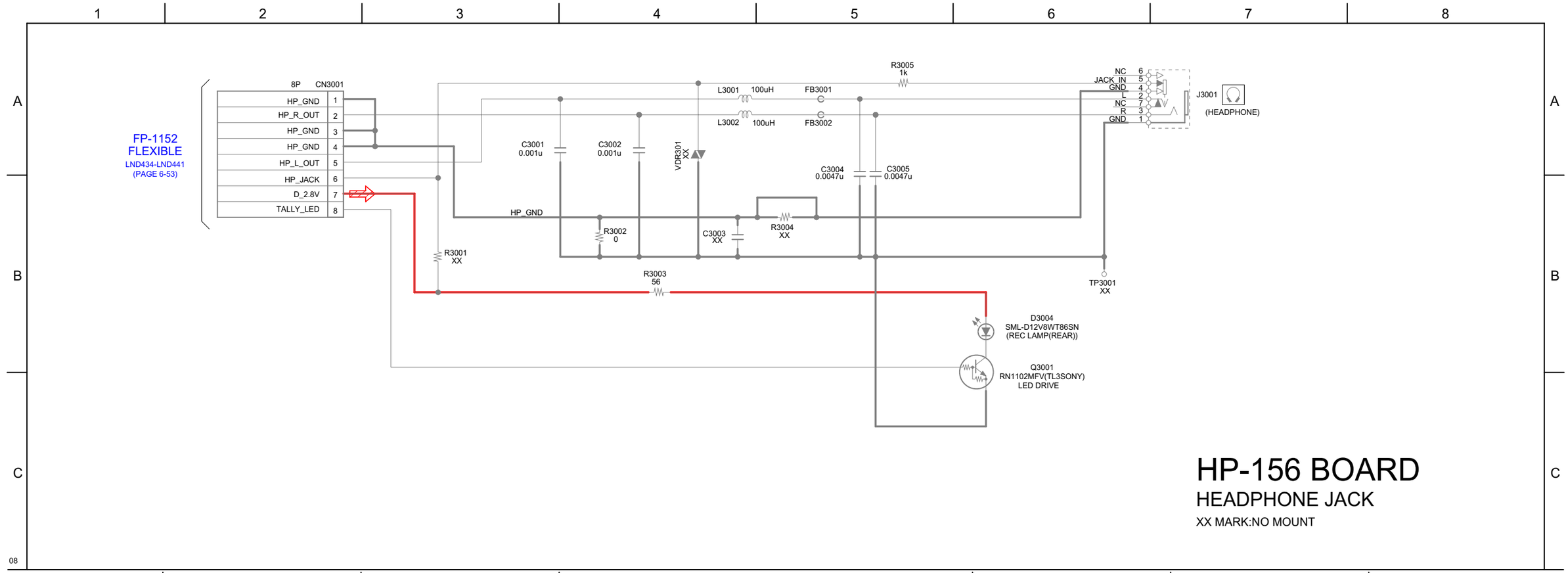
8P CN3001
HP_GND 1
HP_R_OUT 2
HP_GND 3
HP_GND 4
HP_L_OUT 5
HP_JACK 6
D_2.8V 7
TALLY_LED 8
FP-1152
FLEXIBLE
LND434-LND441
(PAGE 6-53)
R3005
1k
L3001 100uH
FB3001
L3002 100uH
FB3002
C3001
0.001u
C3002
0.001u
VDR301
XX
C3004
0.0047u
C3005
0.0047u
HP_GND
R3002
0
C3003
XX
R3004
XX
R3001
XX
R3003
56
NC 6
JACK_IN 5
GND 4
L 2
NC 7
R 3
GND 1
J3001
(HEADPHONE)
TP3001
XX
D3004
SML-D12V8WT86SN
(REC LAMP(REAR))
Q3001
RN1102MFV(TL3SONY)
LED DRIVE
HP-156 BOARD
HEADPHONE JACK
XX MARK:NO MOUNT

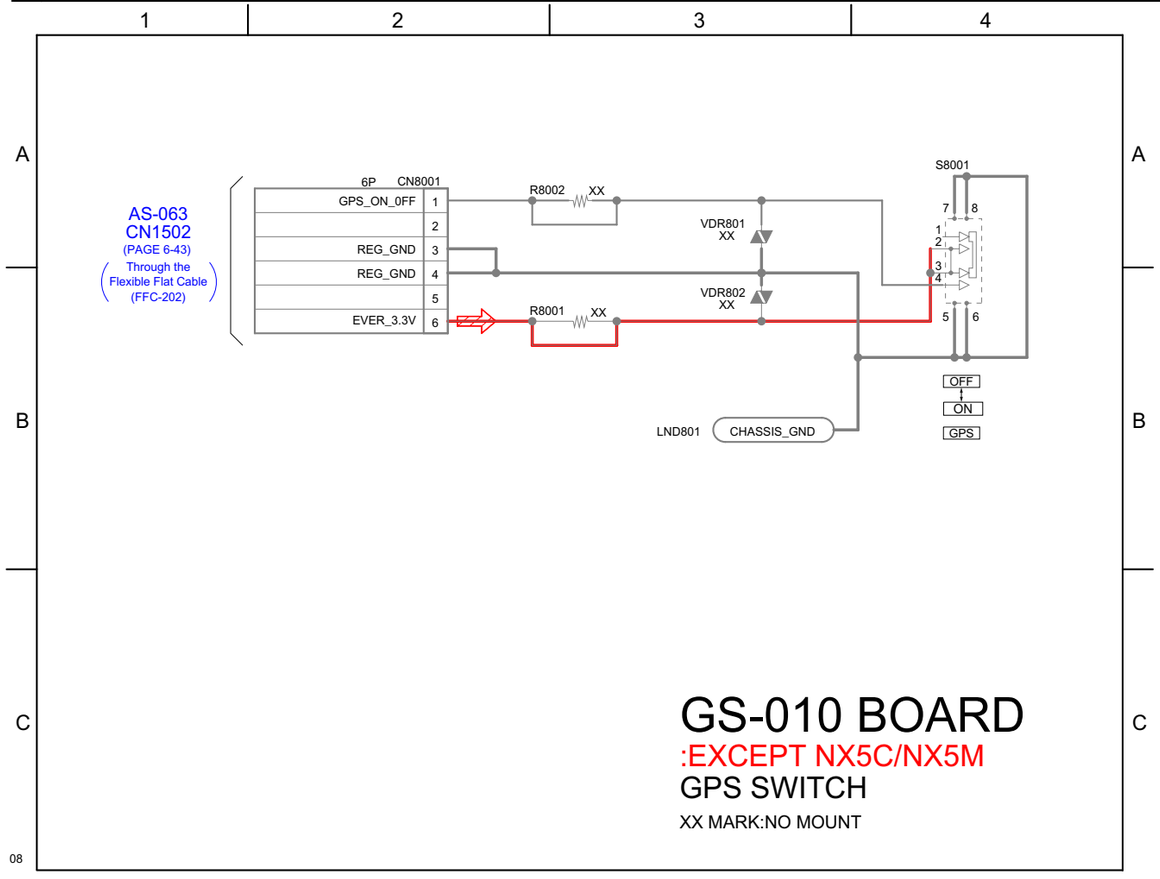
AS-063
CN1502
(PAGE 6-43)
Through the
Flexible Flat Cable
(FFC-202)
6P CN8001
GPS_ON_0FF 1
2
REG_GND 3
REG_GND 4
5
EVER_3.3V 6
R8002 XX
R8001 XX
VDR801
XX
VDR802
XX
S8001
OFF
ON
GPS
LND801 CHASSIS_GND
GS-010 BOARD
:EXCEPT NX5C/NX5M
GPS SWITCH
XX MARK:NO MOUNT

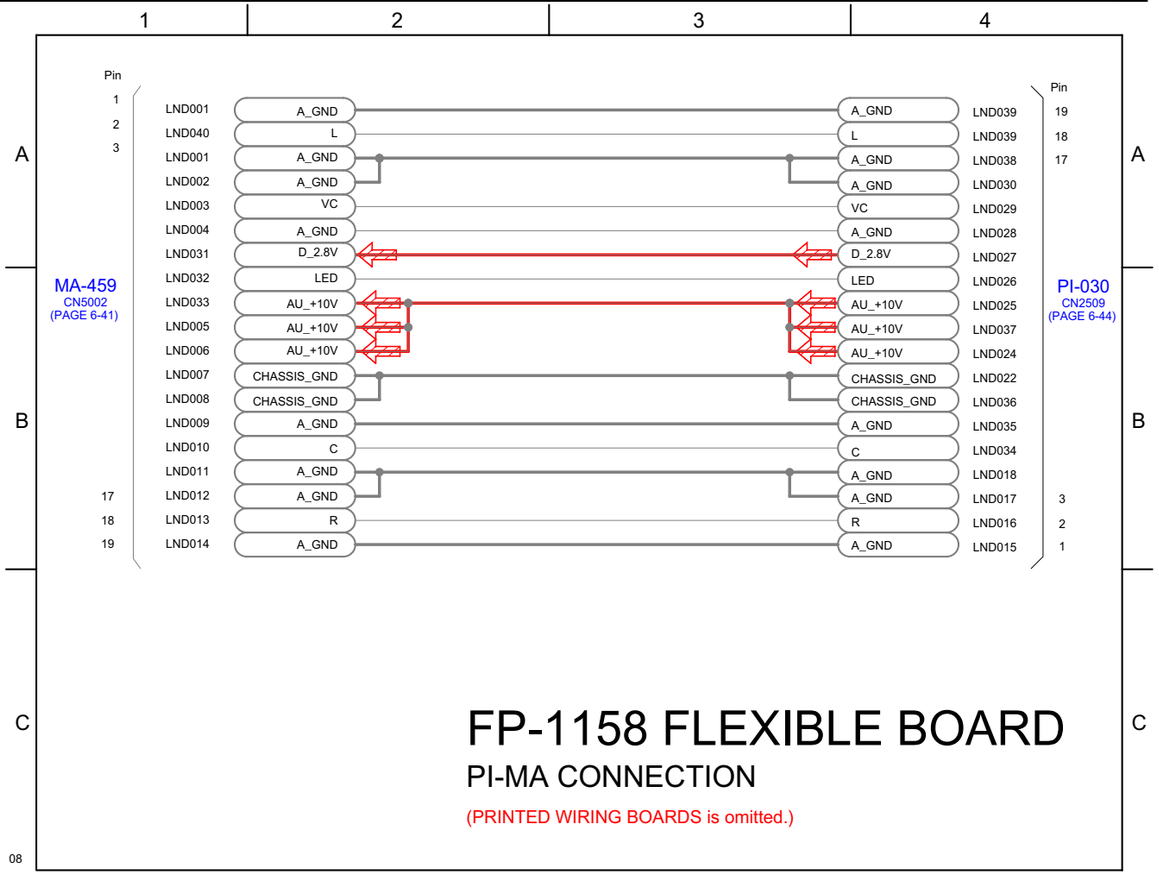
Pin
MA-459
CN5002
(PAGE 6-41)
LND001 A_GND
LND040 L
LND001 A_GND
LND002 A_GND
LND003 VC
LND004 A_GND
LND031 D_2.8V
LND032 LED
LND033 AU_+10V
LND005 AU_+10V
LND006 AU_+10V
LND007 CHASSIS_GND
LND008 CHASSIS_GND
LND009 A_GND
LND010 C
LND011 A_GND
LND012 A_GND
LND013 R
LND014 A_GND
A_GND LND039
L LND039
A_GND LND038
A_GND LND030
VC LND029
A_GND LND028
D_2.8V LND027
LED LND026
AU_+10V LND025
AU_+10V LND037
AU_+10V LND024
CHASSIS_GND LND022
CHASSIS_GND LND036
A_GND LND035
C LND034
A_GND LND018
A_GND LND017
R LND016
A_GND LND015
PI-030
CN2509
(PAGE 6-44)
FP-1158 FLEXIBLE BOARD
PI-MA CONNECTION
(PRINTED WIRING BOARDS is omitted.)

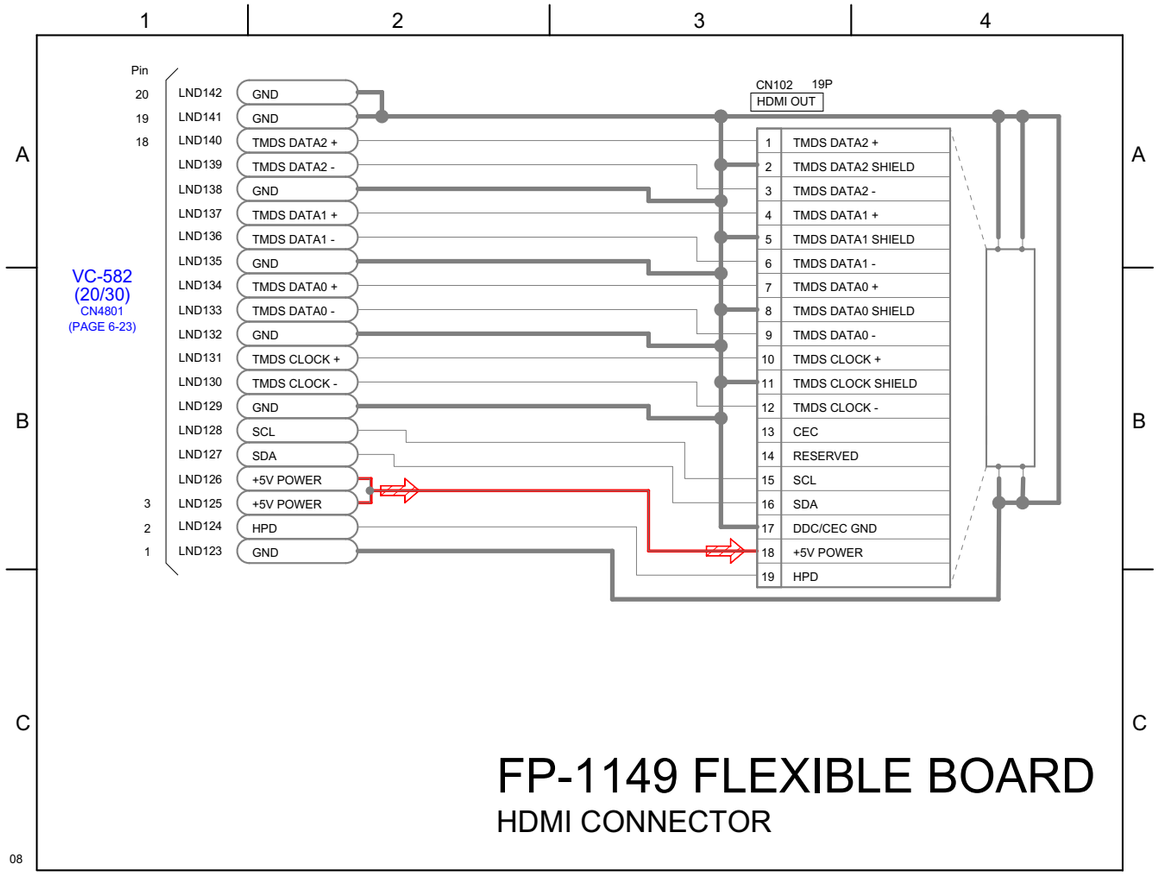

FP-1149 FLEXIBLE BOARD

HDMI CONNECTOR

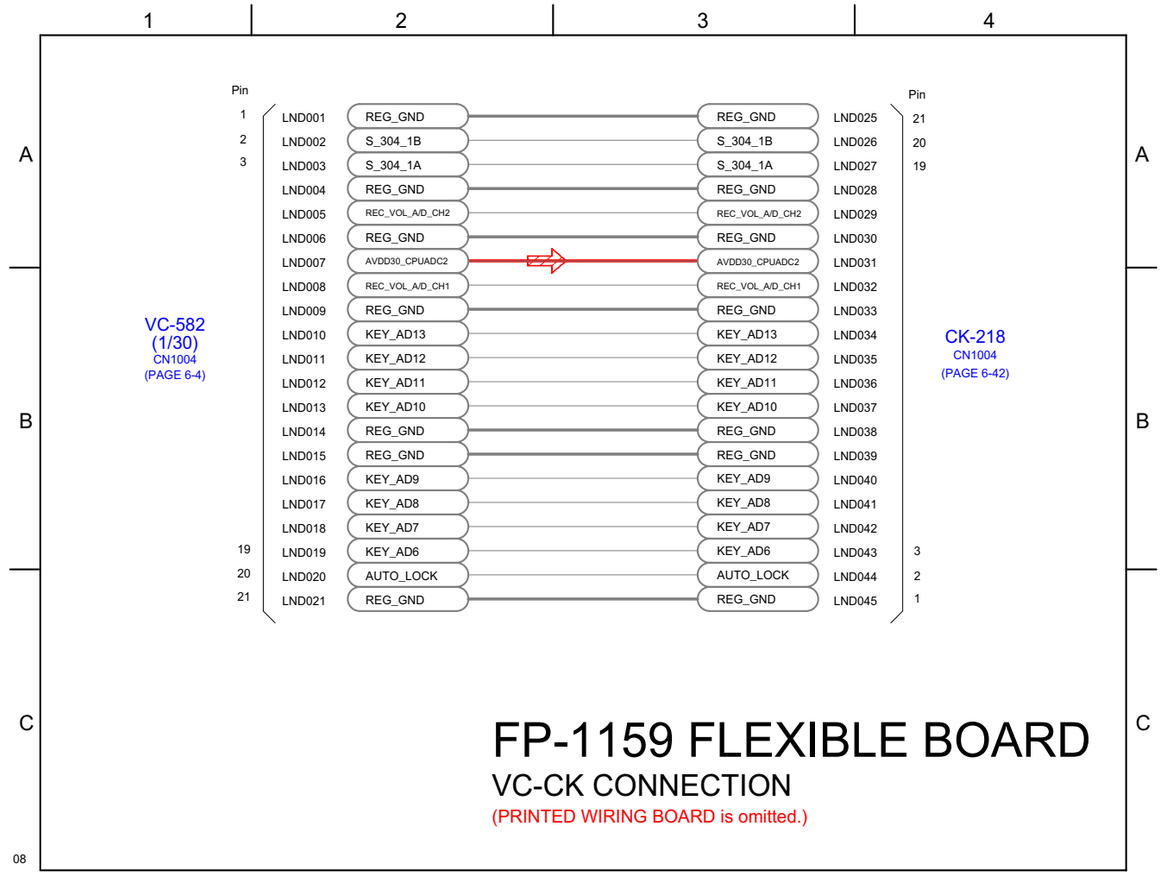

FP-1159 FLEXIBLE BOARD

VC-CK CONNECTION

(PRINTED WIRING BOARD is omitted.)

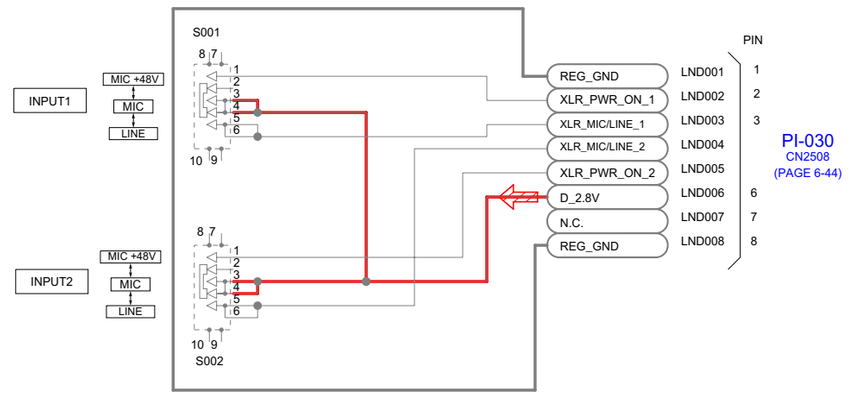

CONTROL SWITCH BLOCK (XS93000)

(CONTROL SWITCH BLOCK(XS93000)is replaced as block, so that PRINTED WIRING BOARD is omitted.

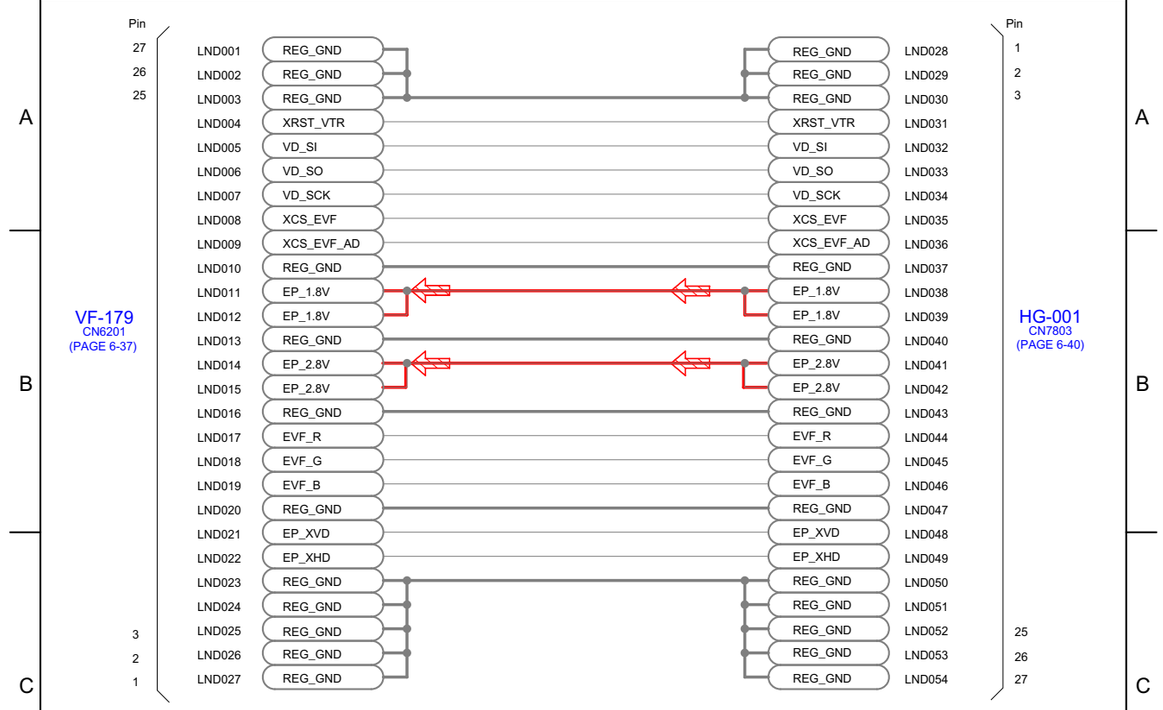

FP-1160 FLEXIBLE BOARD

HG-VF CONNECTION

(PRINTED WIRING BOARD is omitted.)

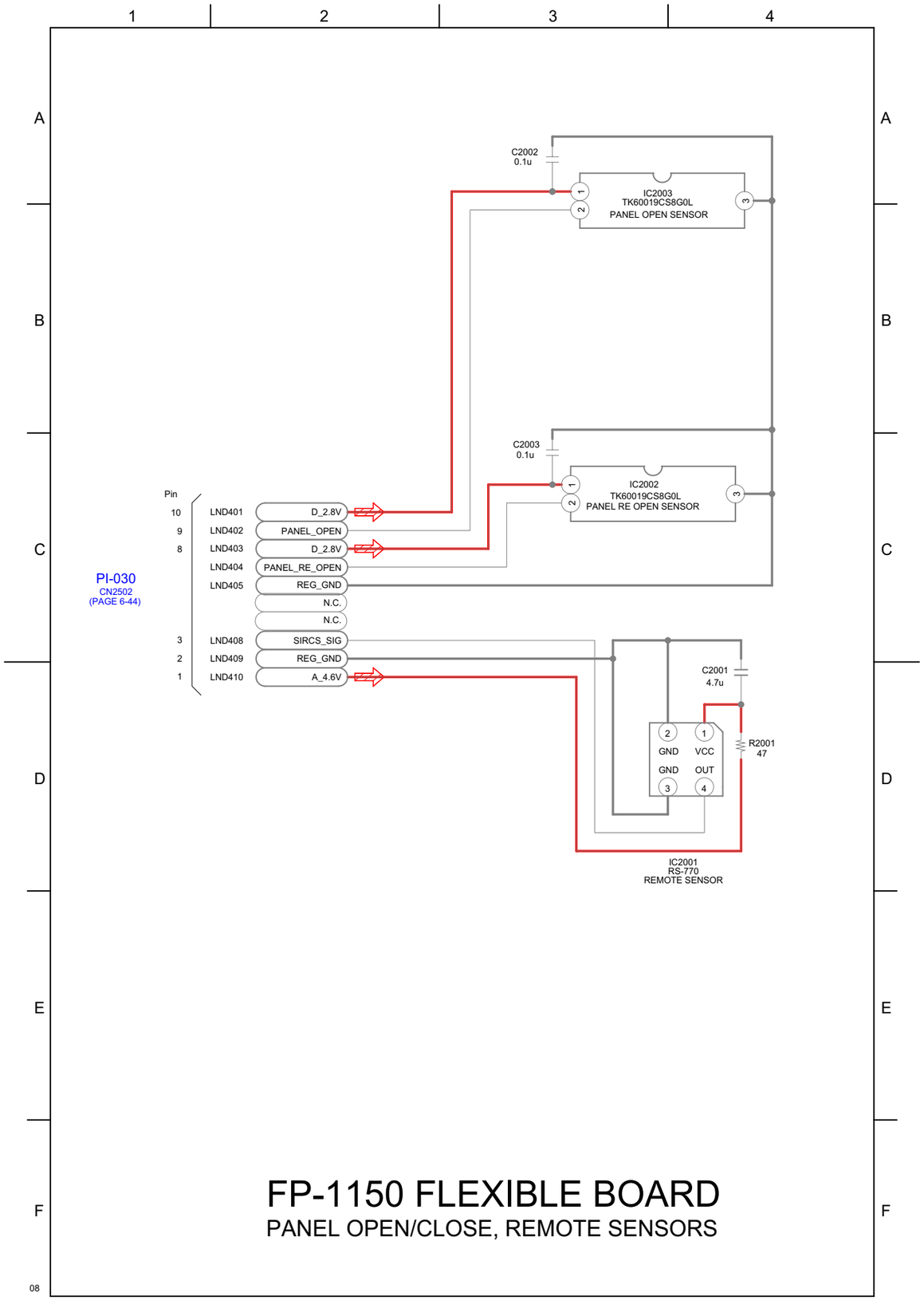
1
2
3
4
A
B
C
D
E
F
08
C2002
0.1u
IC2003
TK60019CS8G0L
PANEL OPEN SENSOR
C2003
0.1u
IC2002
TK60019CS8G0L
PANEL RE OPEN SENSOR
C2001
4.7u
R2001
47
IC2001
RS-770
REMOTE SENSOR
PI-030
CN2502
(PAGE 6-44)
Pin
10 LND401 D_2.8V
9 LND402 PANEL_OPEN
8 LND403 D_2.8V
LND404 PANEL_RE_OPEN
LND405 REG_GND
N.C.
N.C.
3 LND408 SIRCS_SIG
2 LND409 REG_GND
1 LND410 A_4.6V
GND
VCC
GND
OUT
FP-1150 FLEXIBLE BOARD
PANEL OPEN/CLOSE, REMOTE SENSORS

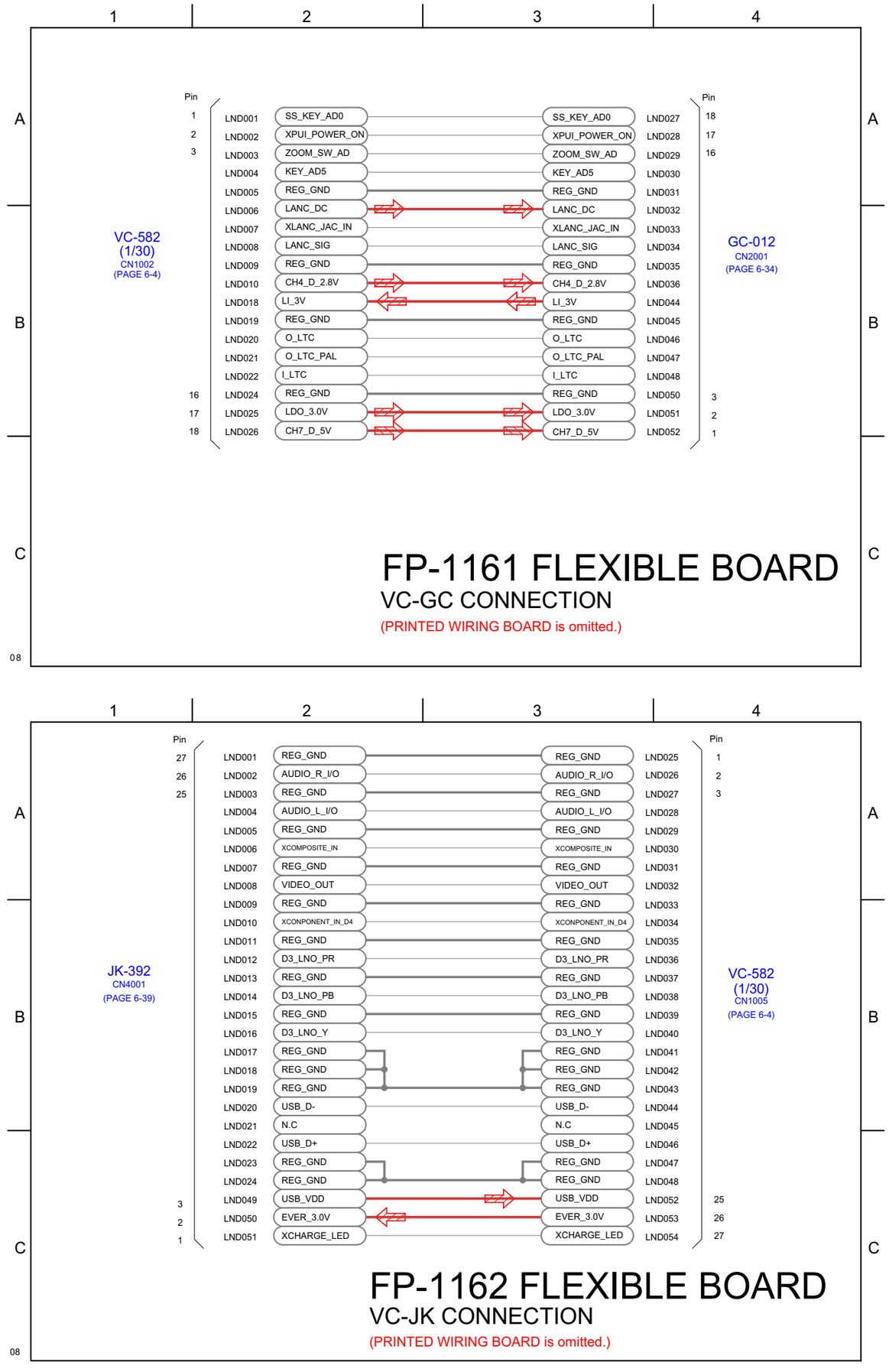
1
2
3
4
A
B
C
08
VC-582
(1/30)
CN1002
(PAGE 6-4)
Pin
1 LND001 SS_KEY_AD0
2 LND002 XPUI_POWER_ON
3 LND003 ZOOM_SW_AD
LND004 KEY_AD5
LND005 REG_GND
LND006 LANC_DC
LND007 XLANC_JAC_IN
LND008 LANC_SIG
LND009 REG_GND
LND010 CH4_D_2.8V
LND018 LI_3V
LND019 REG_GND
LND020 O_LTC
LND021 O_LTC_PAL
LND022 I_LTC
16 LND024 REG_GND
17 LND025 LDO_3.0V
18 LND026 CH7_D_5V
SS_KEY_AD0 LND027 18
XPUI_POWER_ON LND028 17
ZOOM_SW_AD LND029 16
KEY_AD5 LND030
REG_GND LND031
LANC_DC LND032
XLANC_JAC_IN LND033
LANC_SIG LND034
REG_GND LND035
CH4_D_2.8V LND036
LI_3V LND044
REG_GND LND045
O_LTC LND046
O_LTC_PAL LND047
I_LTC LND048
REG_GND LND050 3
LDO_3.0V LND051 2
CH7_D_5V LND052 1
GC-012
CN2001
(PAGE 6-34)
FP-1161 FLEXIBLE BOARD
VC-GC CONNECTION
(PRINTED WIRING BOARD is omitted.)

1
2
3
4
A
B
C
08
JK-392
CN4001
(PAGE 6-39)
Pin
27 LND001 REG_GND
26 LND002 AUDIO_R_I/O
25 LND003 REG_GND
LND004 AUDIO_L_I/O
LND005 REG_GND
LND006 XCOMPOSITE_IN
LND007 REG_GND
LND008 VIDEO_OUT
LND009 REG_GND
LND010 XCONPONENT_IN_D4
LND011 REG_GND
LND012 D3_LNO_PR
LND013 REG_GND
LND014 D3_LNO_PB
LND015 REG_GND
LND016 D3_LNO_Y
LND017 REG_GND
LND018 REG_GND
LND019 REG_GND
LND020 USB_D-
LND021 N.C
LND022 USB_D+
LND023 REG_GND
LND024 REG_GND
3 LND049 USB_VDD
2 LND050 EVER_3.0V
1 LND051 XCHARGE_LED
REG_GND LND025 1
AUDIO_R_I/O LND026 2
REG_GND LND027 3
AUDIO_L_I/O LND028
REG_GND LND029
XCOMPOSITE_IN LND030
REG_GND LND031
VIDEO_OUT LND032
REG_GND LND033
XCONPONENT_IN_D4 LND034
REG_GND LND035
D3_LNO_PR LND036
REG_GND LND037
D3_LNO_PB LND038
REG_GND LND039
D3_LNO_Y LND040
REG_GND LND041
REG_GND LND042
REG_GND LND043
USB_D- LND044
N.C LND045
USB_D+ LND046
REG_GND LND047
REG_GND LND048
USB_VDD LND052 25
EVER_3.0V LND053 26
XCHARGE_LED LND054 27
VC-582
(1/30)
CN1005
(PAGE 6-4)
FP-1162 FLEXIBLE BOARD
VC-JK CONNECTION
(PRINTED WIRING BOARD is omitted.)

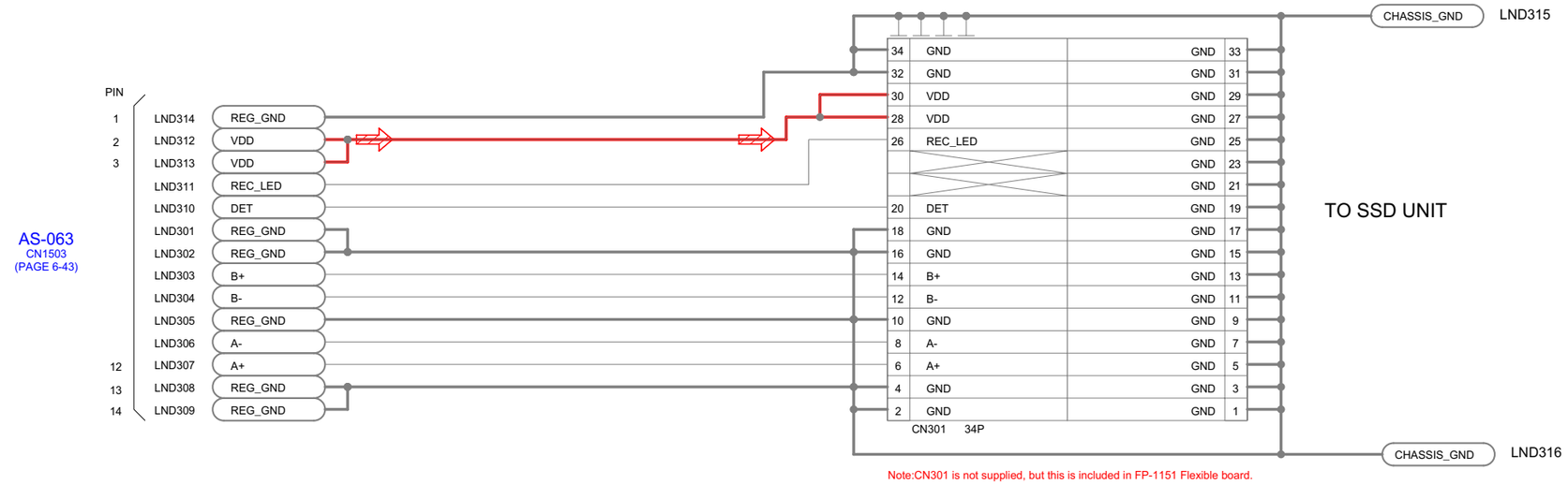

FP-1151 FLEXIBLE BOARD

CONNECTOR FOR SSD UNIT

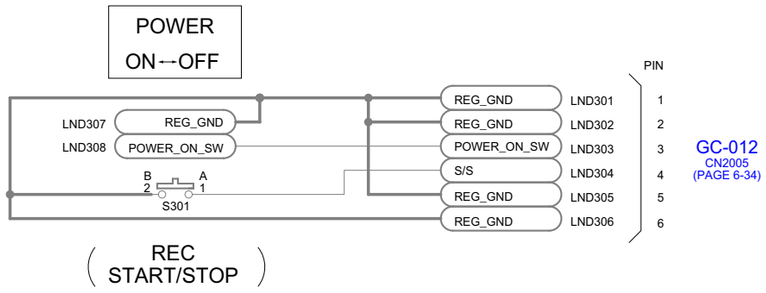

CONTROL SWITCH BLOCK (PS94000)

CONTROL SWITCH BLOCK(PS94000)is replaced as block, so that PRINTED WIRING BOARD is omitted.

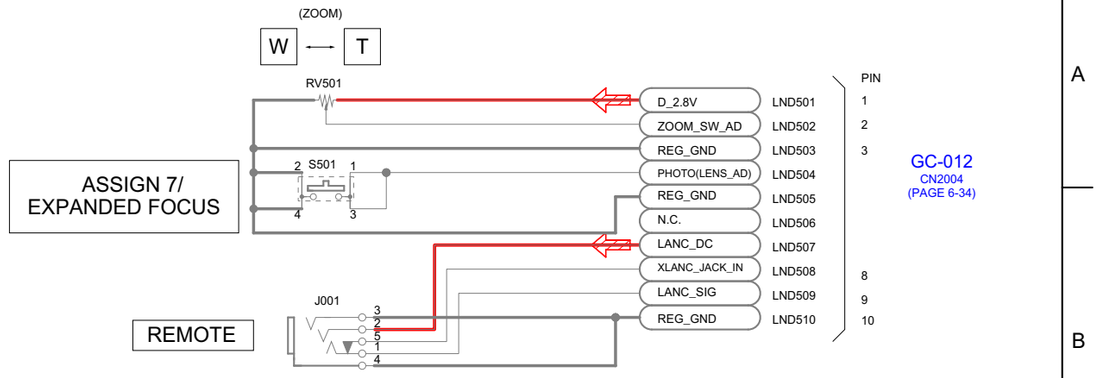

CONTROL SWITCH BLOCK (PZ94000)

CONTROL SWITCH BLOCK(PZ94000)is replaced as block, so that PRINTED WIRING BOARD is omitted.

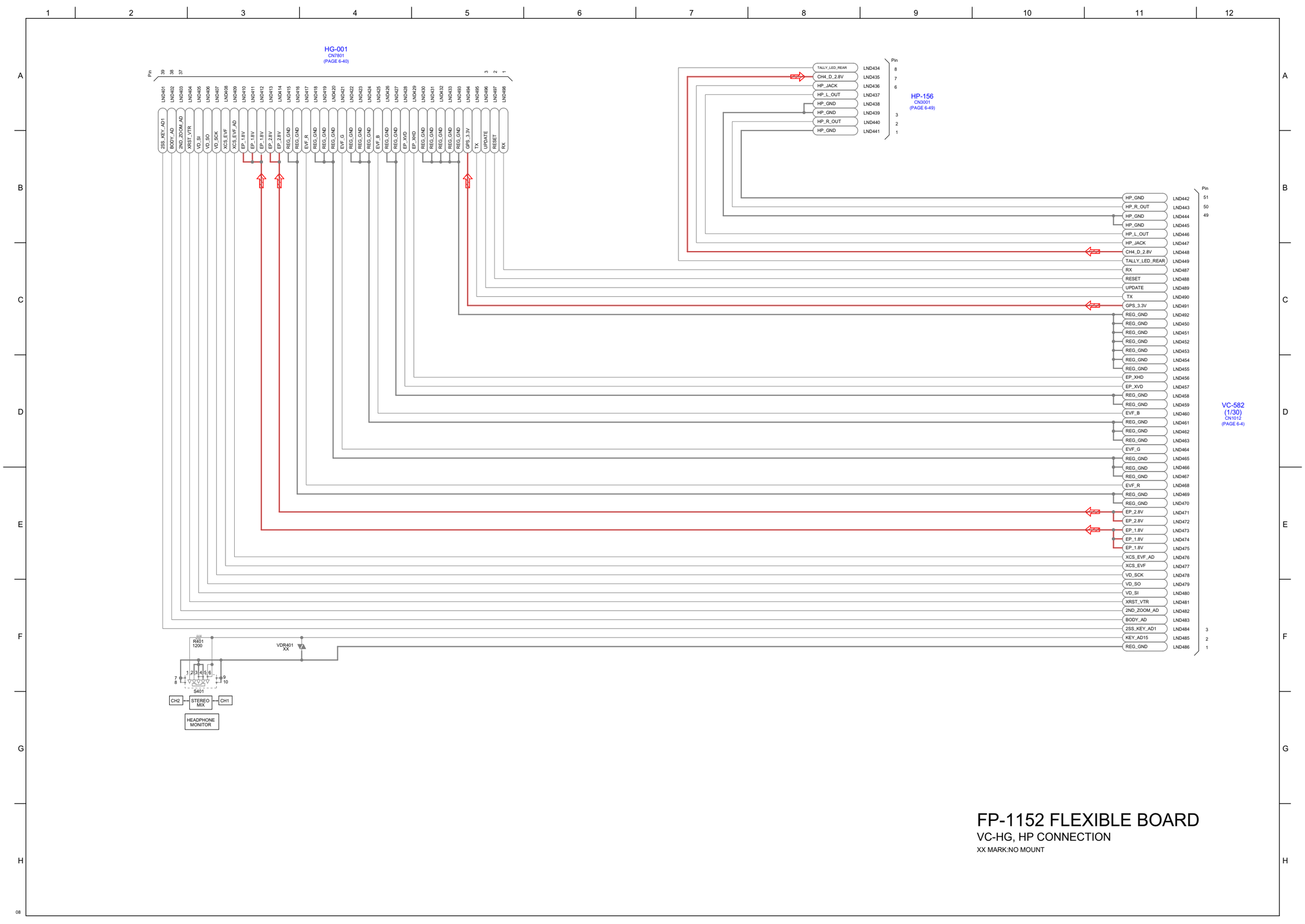

FP-1152 FLEXIBLE BOARD

VC-HG, HP CONNECTION

XX MARK:NO MOUNT

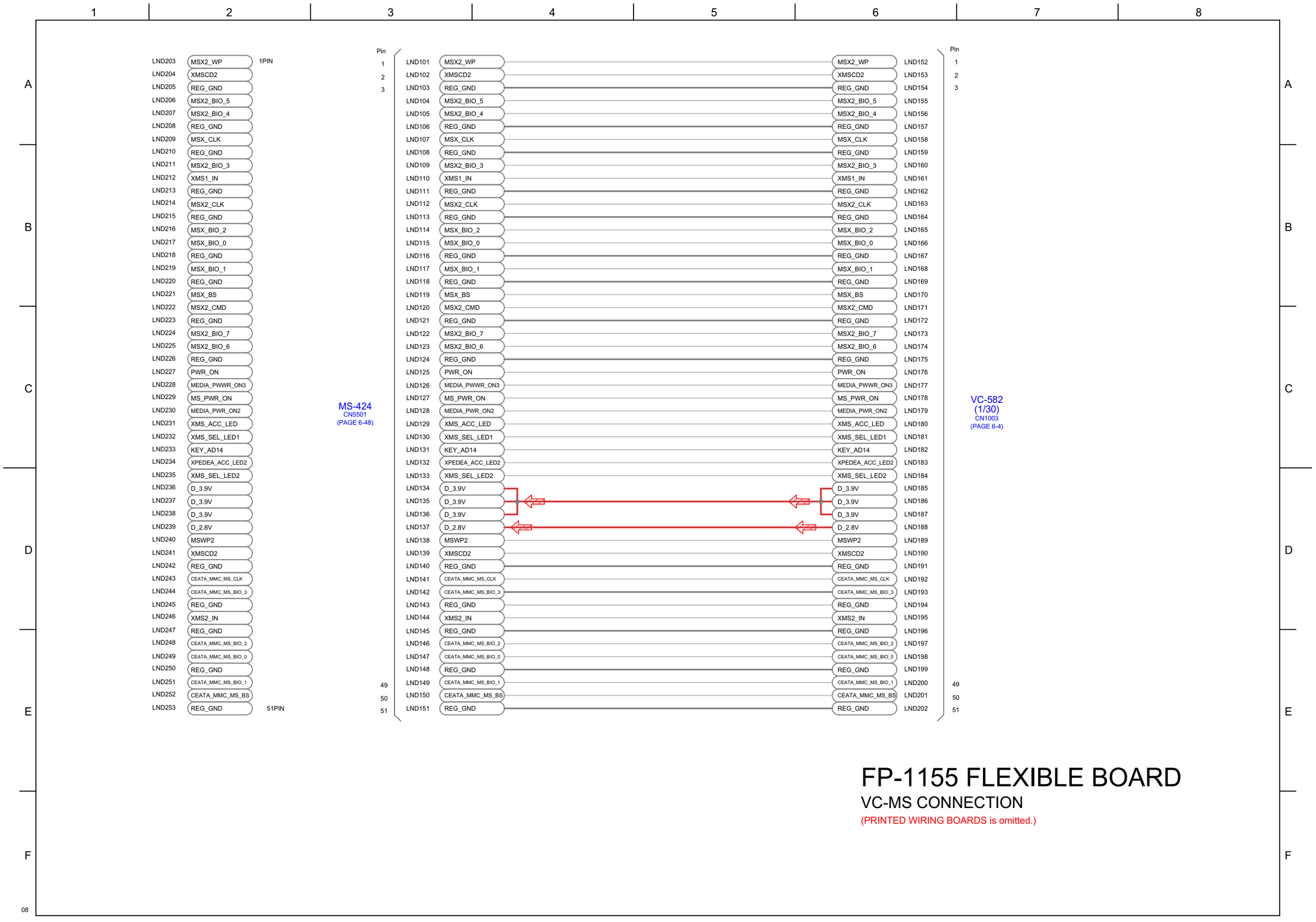
1PIN
LND203 MSX2_WP
LND204 XMSCD2
LND205 REG_GND
LND206 MSX2_BIO_5
LND207 MSX2_BIO_4
LND208 REG_GND
LND209 MSX_CLK
LND210 REG_GND
LND211 MSX2_BIO_3
LND212 XMS1_IN
LND213 REG_GND
LND214 MSX2_CLK
LND215 REG_GND
LND216 MSX_BIO_2
LND217 MSX_BIO_0
LND218 REG_GND
LND219 MSX_BIO_1
LND220 REG_GND
LND221 MSX_BS
LND222 MSX2_CMD
LND223 REG_GND
LND224 MSX2_BIO_7
LND225 MSX2_BIO_6
LND226 REG_GND
LND227 PWR_ON
LND228 MEDIA_PWWR_ON3
LND229 MS_PWR_ON
LND230 MEDIA_PWR_ON2
LND231 XMS_ACC_LED
LND232 XMS_SEL_LED1
LND233 KEY_AD14
LND234 XPEDEA_ACC_LED2
LND235 XMS_SEL_LED2
LND236 D_3.9V
LND237 D_3.9V
LND238 D_3.9V
LND239 D_2.8V
LND240 MSWP2
LND241 XMSCD2
LND242 REG_GND
LND243 CEATA_MMC_MS_CLK
LND244 CEATA_MMC_MS_BIO_3
LND245 REG_GND
LND246 XMS2_IN
LND247 REG_GND
LND248 CEATA_MMC_MS_BIO_2
LND249 CEATA_MMC_MS_BIO_0
LND250 REG_GND
LND251 CEATA_MMC_MS_BIO_1
LND252 CEATA_MMC_MS_BS
LND253 REG_GND
51PIN
MS-424
CN5501
(PAGE 6-48)
Pin
1
2
3
49
50
51
LND101 MSX2_WP
LND102 XMSCD2
LND103 REG_GND
LND104 MSX2_BIO_5
LND105 MSX2_BIO_4
LND106 REG_GND
LND107 MSX_CLK
LND108 REG_GND
LND109 MSX2_BIO_3
LND110 XMS1_IN
LND111 REG_GND
LND112 MSX2_CLK
LND113 REG_GND
LND114 MSX_BIO_2
LND115 MSX_BIO_0
LND116 REG_GND
LND117 MSX_BIO_1
LND118 REG_GND
LND119 MSX_BS
LND120 MSX2_CMD
LND121 REG_GND
LND122 MSX2_BIO_7
LND123 MSX2_BIO_6
LND124 REG_GND
LND125 PWR_ON
LND126 MEDIA_PWWR_ON3
LND127 MS_PWR_ON
LND128 MEDIA_PWR_ON2
LND129 XMS_ACC_LED
LND130 XMS_SEL_LED1
LND131 KEY_AD14
LND132 XPEDEA_ACC_LED2
LND133 XMS_SEL_LED2
LND134 D_3.9V
LND135 D_3.9V
LND136 D_3.9V
LND137 D_2.8V
LND138 MSWP2
LND139 XMSCD2
LND140 REG_GND
LND141 CEATA_MMC_MS_CLK
LND142 CEATA_MMC_MS_BIO_3
LND143 REG_GND
LND144 XMS2_IN
LND145 REG_GND
LND146 CEATA_MMC_MS_BIO_2
LND147 CEATA_MMC_MS_BIO_0
LND148 REG_GND
LND149 CEATA_MMC_MS_BIO_1
LND150 CEATA_MMC_MS_BS
LND151 REG_GND
LND152 MSX2_WP
LND153 XMSCD2
LND154 REG_GND
LND155 MSX2_BIO_5
LND156 MSX2_BIO_4
LND157 REG_GND
LND158 MSX_CLK
LND159 REG_GND
LND160 MSX2_BIO_3
LND161 XMS1_IN
LND162 REG_GND
LND163 MSX2_CLK
LND164 REG_GND
LND165 MSX_BIO_2
LND166 MSX_BIO_0
LND167 REG_GND
LND168 MSX_BIO_1
LND169 REG_GND
LND170 MSX_BS
LND171 MSX2_CMD
LND172 REG_GND
LND173 MSX2_BIO_7
LND174 MSX2_BIO_6
LND175 REG_GND
LND176 PWR_ON
LND177 MEDIA_PWWR_ON3
LND178 MS_PWR_ON
LND179 MEDIA_PWR_ON2
LND180 XMS_ACC_LED
LND181 XMS_SEL_LED1
LND182 KEY_AD14
LND183 XPEDEA_ACC_LED2
LND184 XMS_SEL_LED2
LND185 D_3.9V
LND186 D_3.9V
LND187 D_3.9V
LND188 D_2.8V
LND189 MSWP2
LND190 XMSCD2
LND191 REG_GND
LND192 CEATA_MMC_MS_CLK
LND193 CEATA_MMC_MS_BIO_3
LND194 REG_GND
LND195 XMS2_IN
LND196 REG_GND
LND197 CEATA_MMC_MS_BIO_2
LND198 CEATA_MMC_MS_BIO_0
LND199 REG_GND
LND200 CEATA_MMC_MS_BIO_1
LND201 CEATA_MMC_MS_BS
LND202 REG_GND
Pin
1
2
3
49
50
51
VC-582
(1/30)
CN1003
(PAGE 6-4)
FP-1155 FLEXIBLE BOARD
VC-MS CONNECTION
(PRINTED WIRING BOARDS is omitted.)

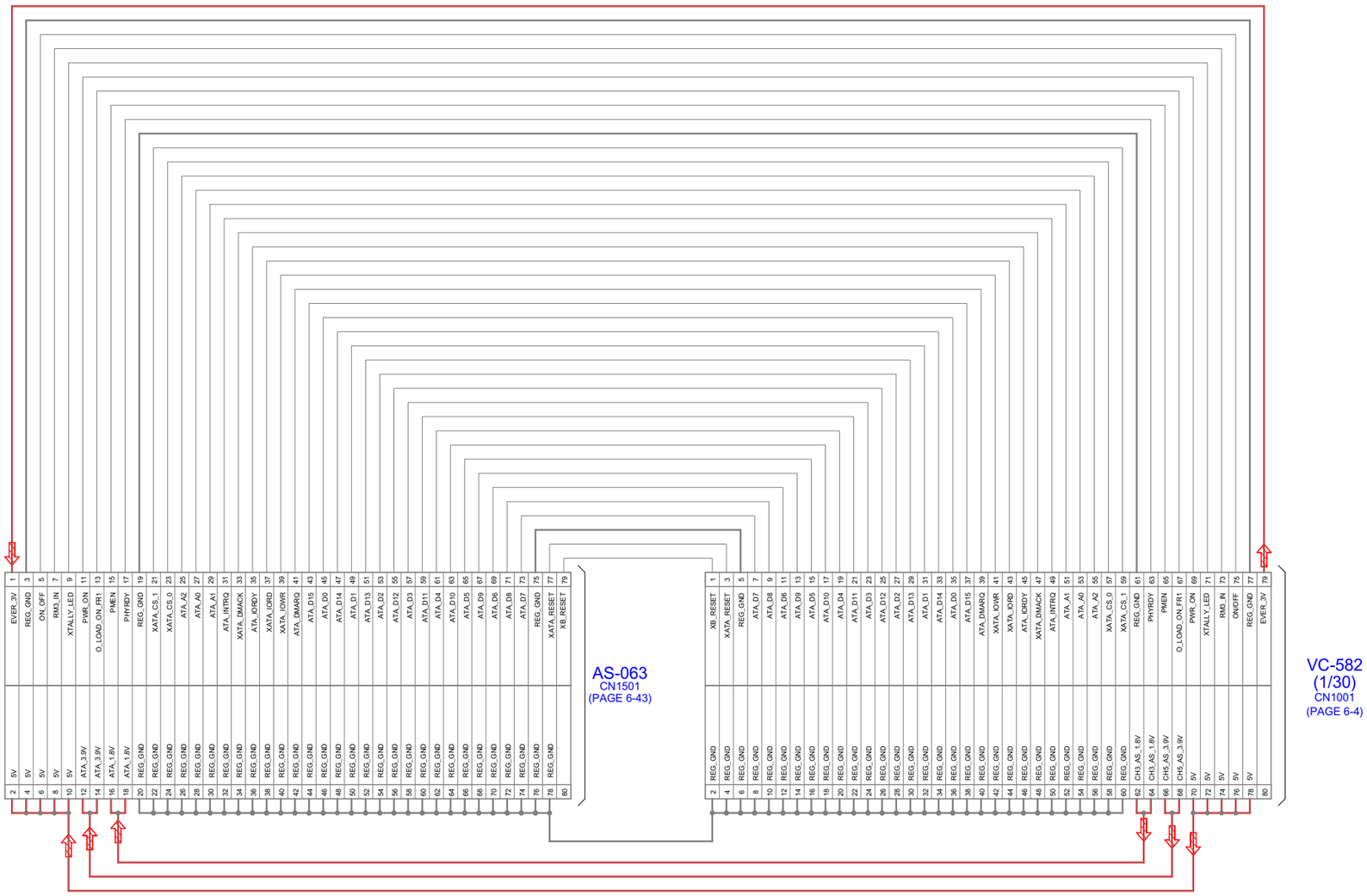

FP-1156 FLEXIBLE BOARD

VC-AS CONNECTION

(PRINTED WIRING BOARD is omitted.)

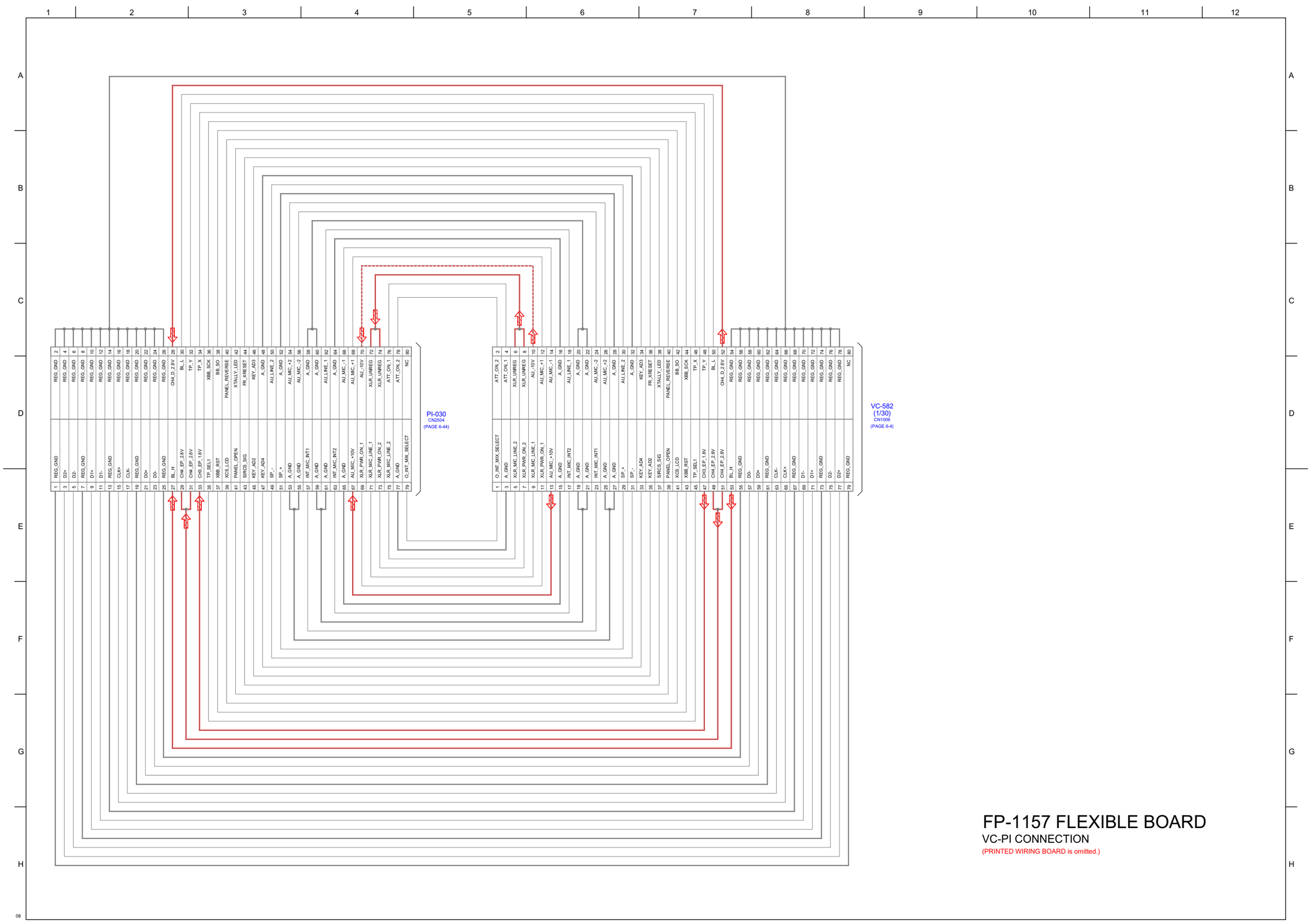

FP-1157 FLEXIBLE BOARD

VC-PI CONNECTION

(PRINTED WIRING BOARD is omitted.)

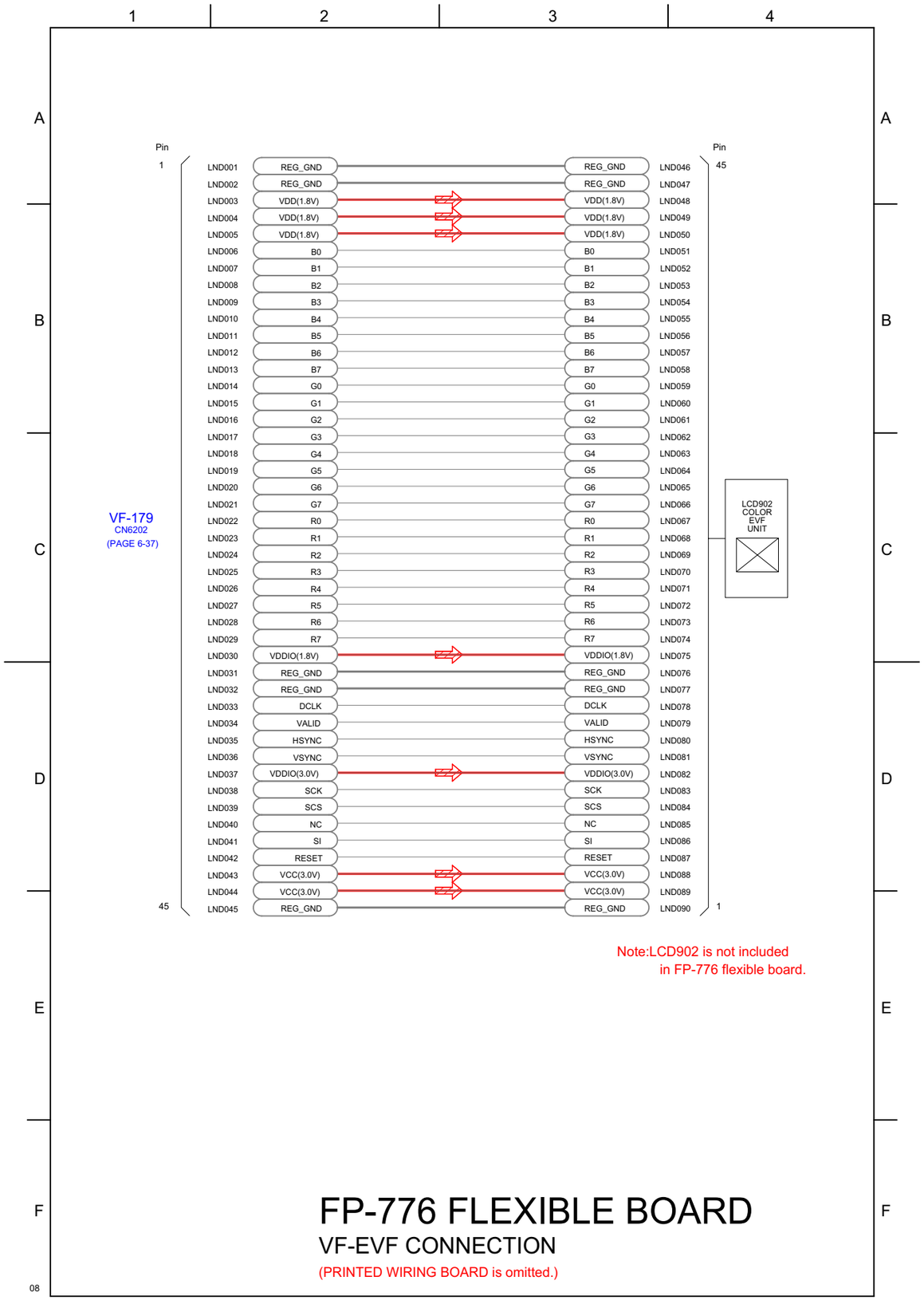

Note:LCD902 is not included
in FP-776 flexible board.

FP-776 FLEXIBLE BOARD

VF-EVF CONNECTION

(PRINTED WIRING BOARD is omitted.)

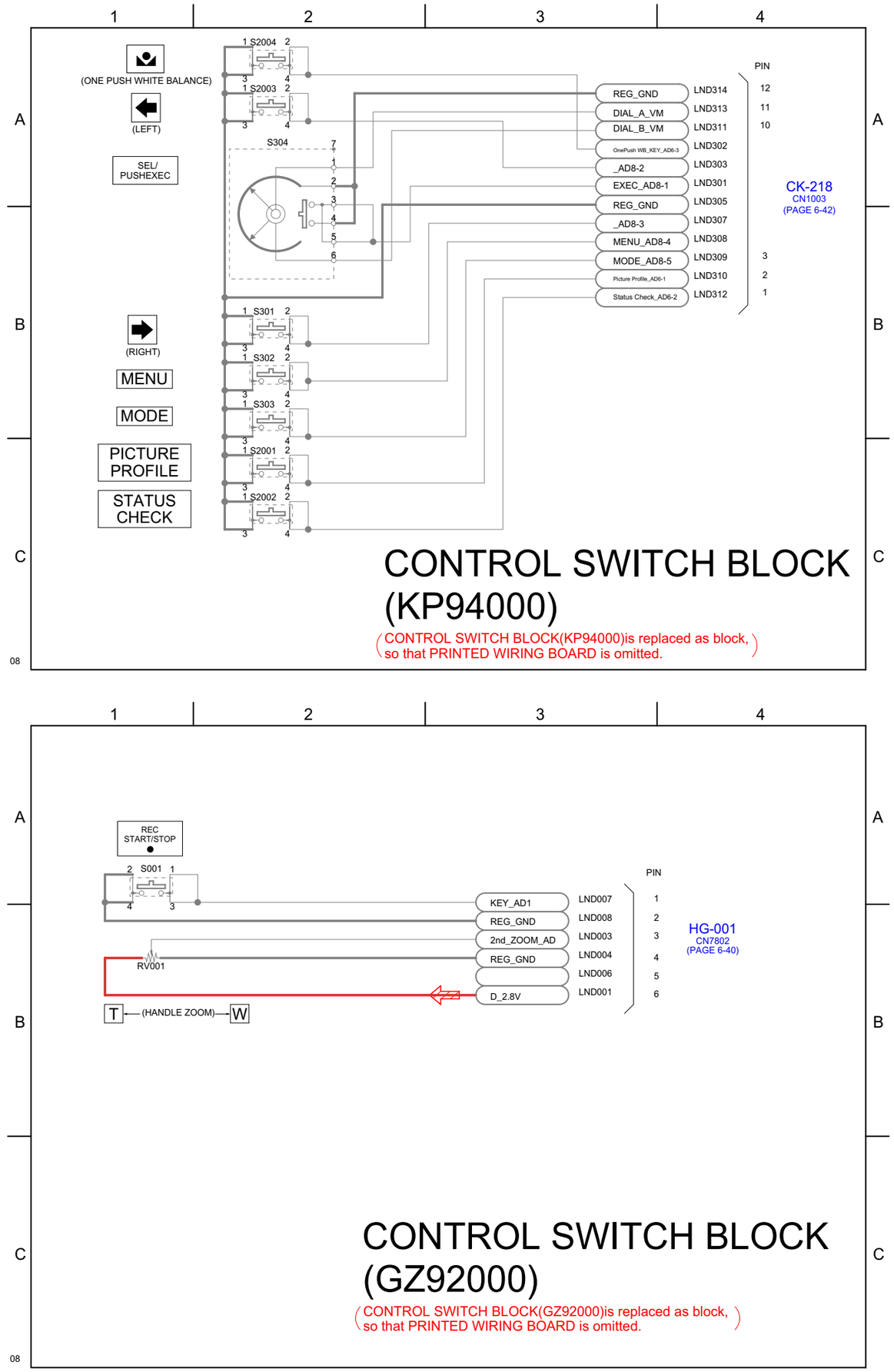

CONTROL SWITCH BLOCK (KP94000)

(CONTROL SWITCH BLOCK(KP94000)is replaced as block,
so that PRINTED WIRING BOARD is omitted.)

CONTROL SWITCH BLOCK (GZ92000)

(CONTROL SWITCH BLOCK(GZ92000)is replaced as block,
so that PRINTED WIRING BOARD is omitted.)

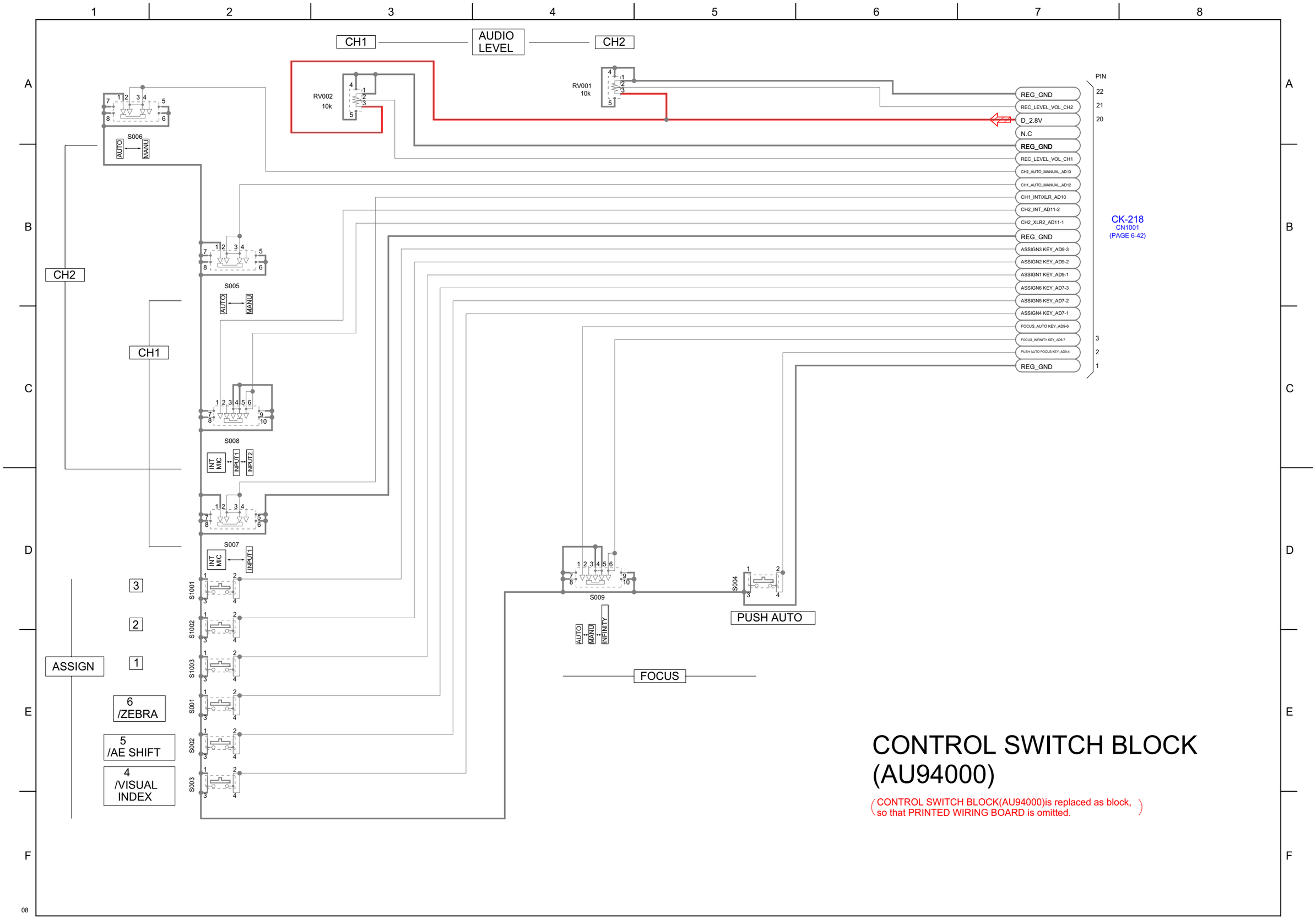

CONTROL SWITCH BLOCK (AU94000)

(CONTROL SWITCH BLOCK(AU94000)is replaced as block, so that PRINTED WIRING BOARD is omitted.)

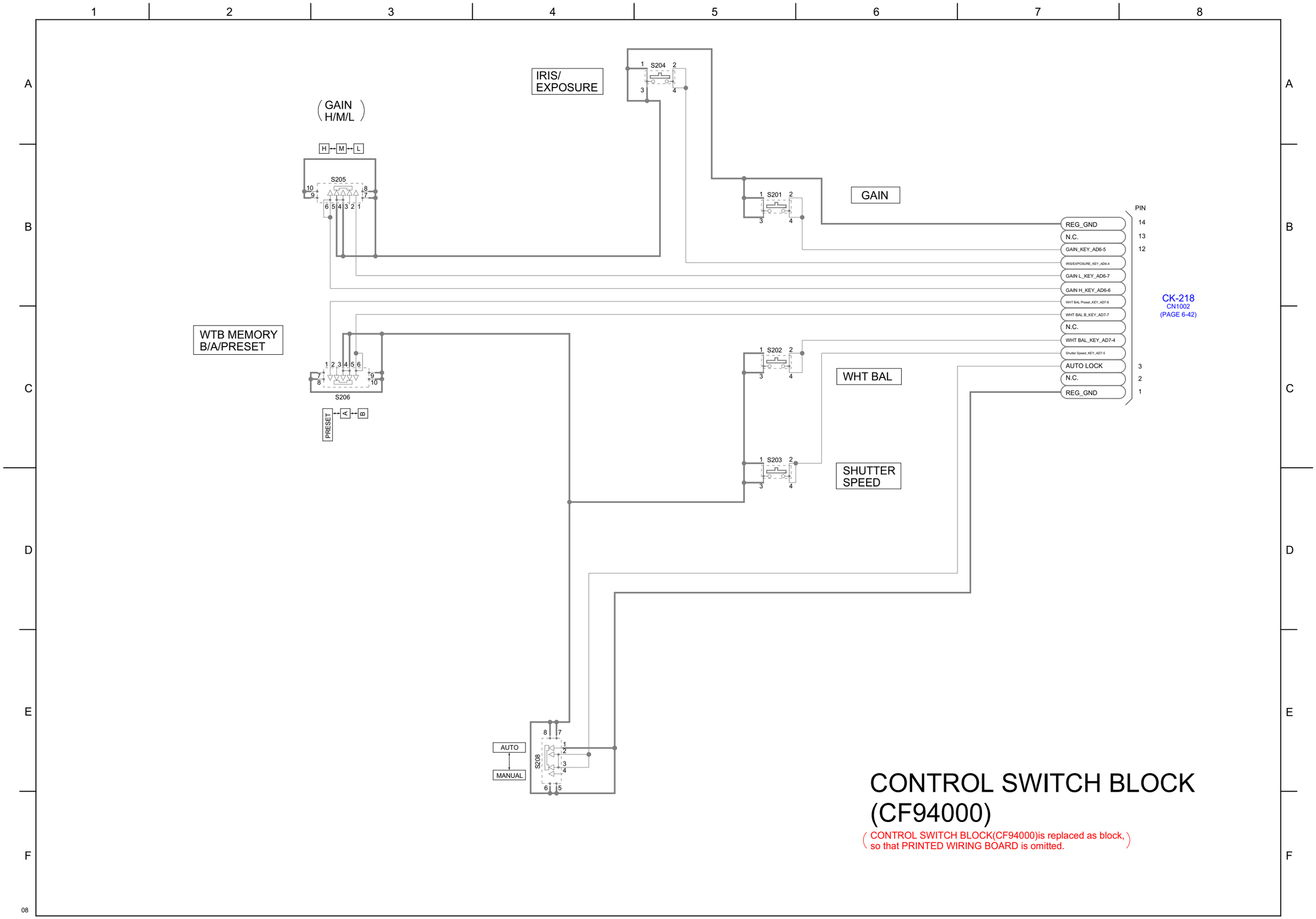
1
2
3
4
5
6
7
8
A
B
C
D
E
F
IRIS/
EXPOSURE
S204
GAIN
H/M/L
H
M
L
S205
GAIN
S201
WTB MEMORY
B/A/PRESET
S206
PRESET
A
B
WHT BAL
S202
SHUTTER
SPEED
S203
AUTO
MANUAL
S208
PIN
REG_GND
N.C.
GAIN_KEY_AD6-5
IRIS/EXPOSURE_KEY_AD6-4
GAIN L_KEY_AD6-7
GAIN H_KEY_AD6-6
WHT BAL Preset_KEY_AD7-6
WHT BAL B_KEY_AD7-7
N.C.
WHT BAL_KEY_AD7-4
Shutter Speed_KEY_AD7-5
AUTO LOCK
N.C.
REG_GND
CK-218
CN1002
(PAGE 6-42)
CONTROL SWITCH BLOCK
(CF94000)
CONTROL SWITCH BLOCK(CF94000)is replaced as block,
so that PRINTED WIRING BOARD is omitted.
08

CM-097 BOARD (SIDE A)

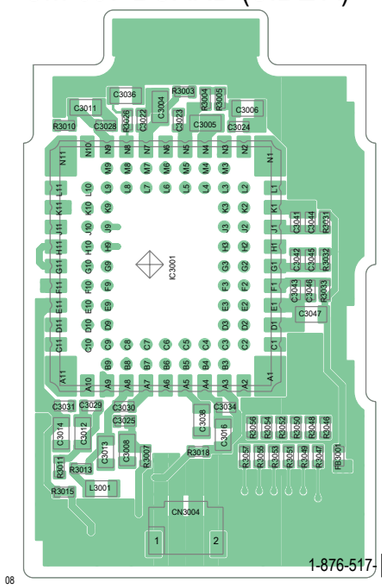

CM-097 BOARD (SIDE B)

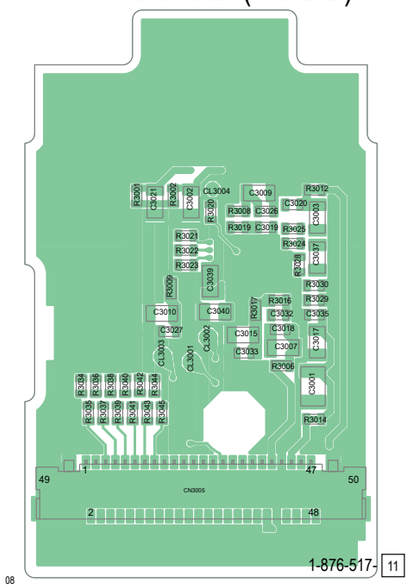

Note: In red and blue, the same CM-097 board is used respective.
Note: CM-097 complete board and all mounted parts (including IC3001(CMOS IMAGER)) are not supplied, but they are included in PRISM DEVICE(service).

CM-104 BOARD (SIDE A)

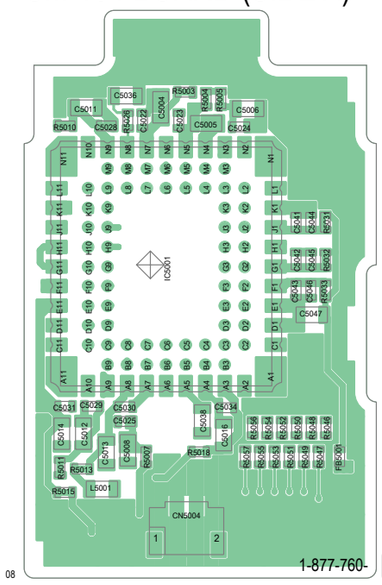

CM-104 BOARD (SIDE B)

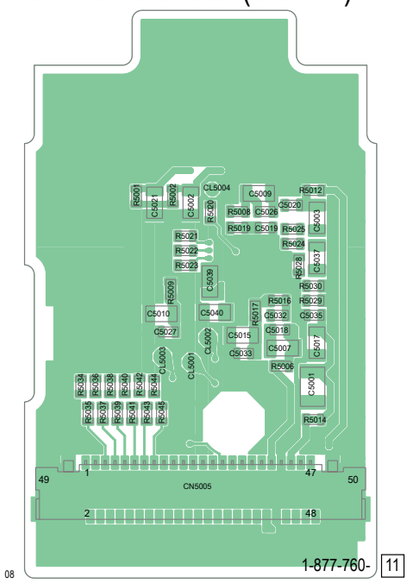

Note: CM-104 complete board and all mounted parts(including IC5001(CMOS IMAGER)) are not supplied, but they are included in PRISM DEVICE(service).

: Uses unleaded solder.

VC-582 BOARD (SIDE A)

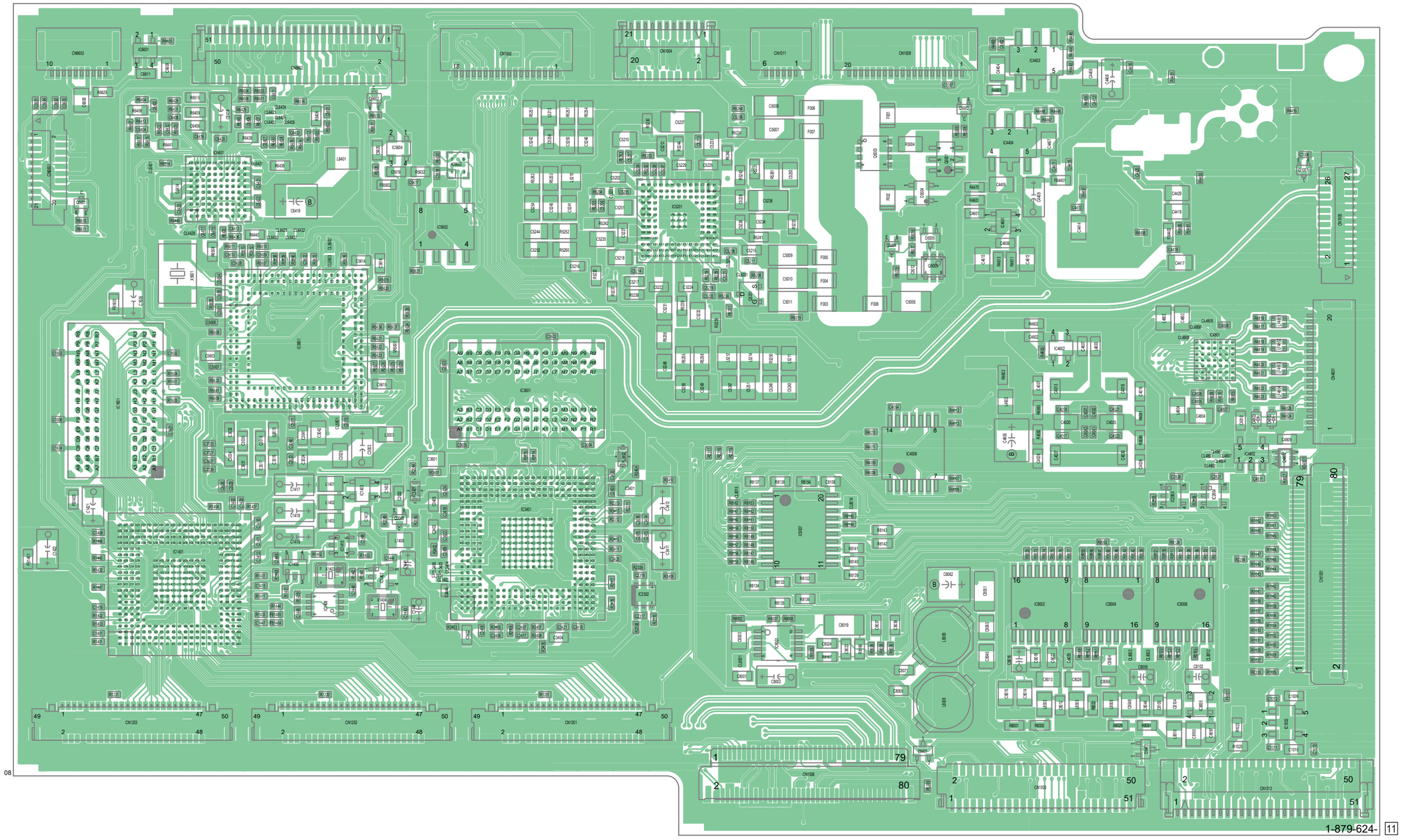

1-879-624-11

: Uses unleaded solder.

VC-582 BOARD (SIDE B)

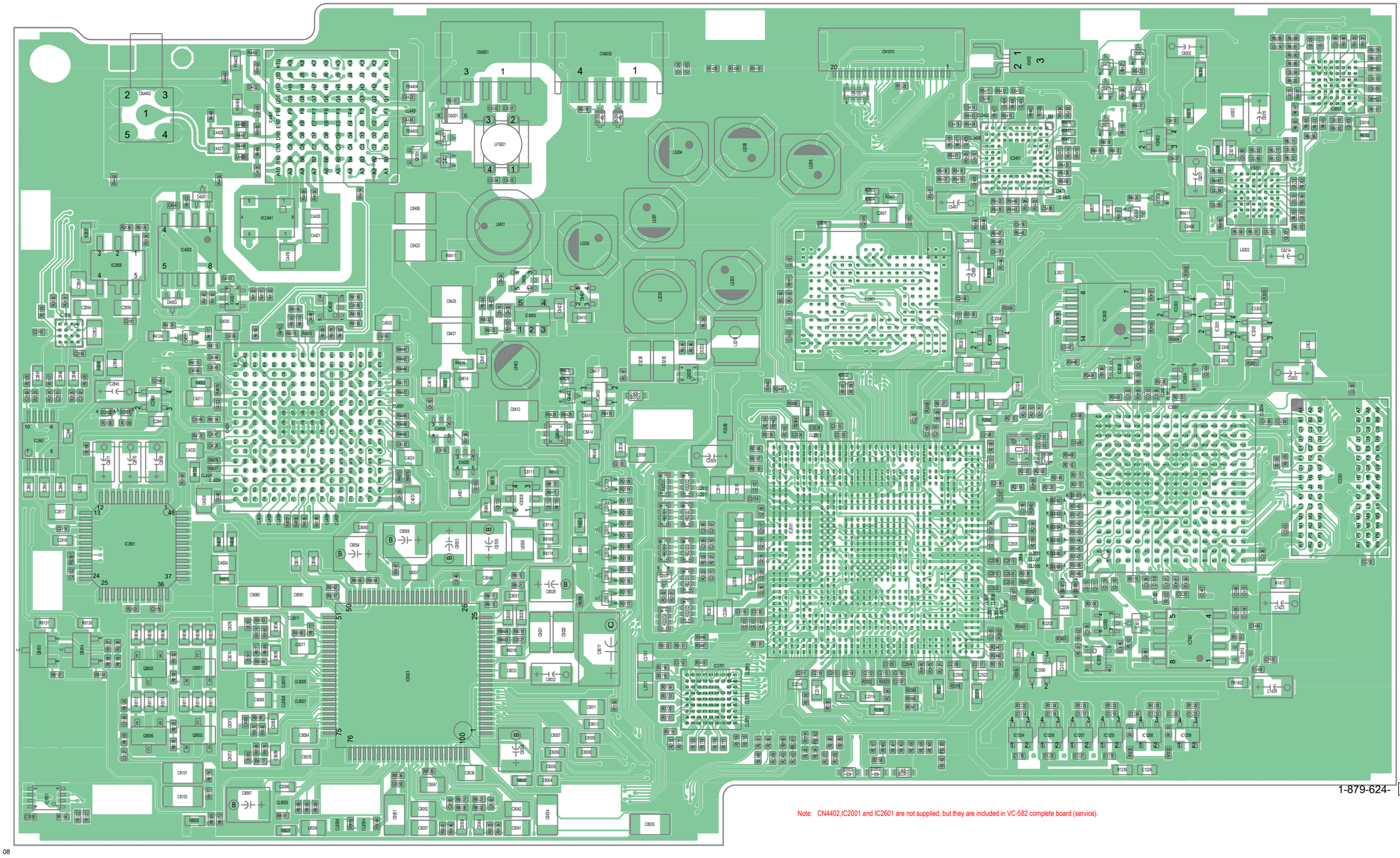

1-879-624- 11

Note: CN4402,IC2001 and IC2601 are not supplied, but they are included in VC-582 complete board (service).

08

GC-012 BOARD (SIDE A)

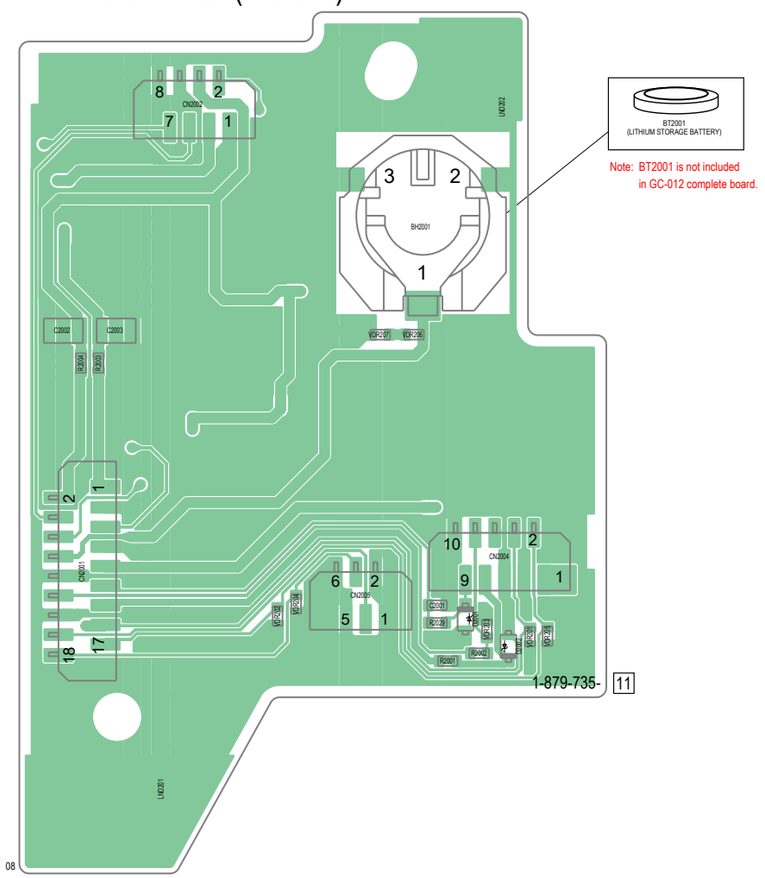

GC-012 BOARD (SIDE B)

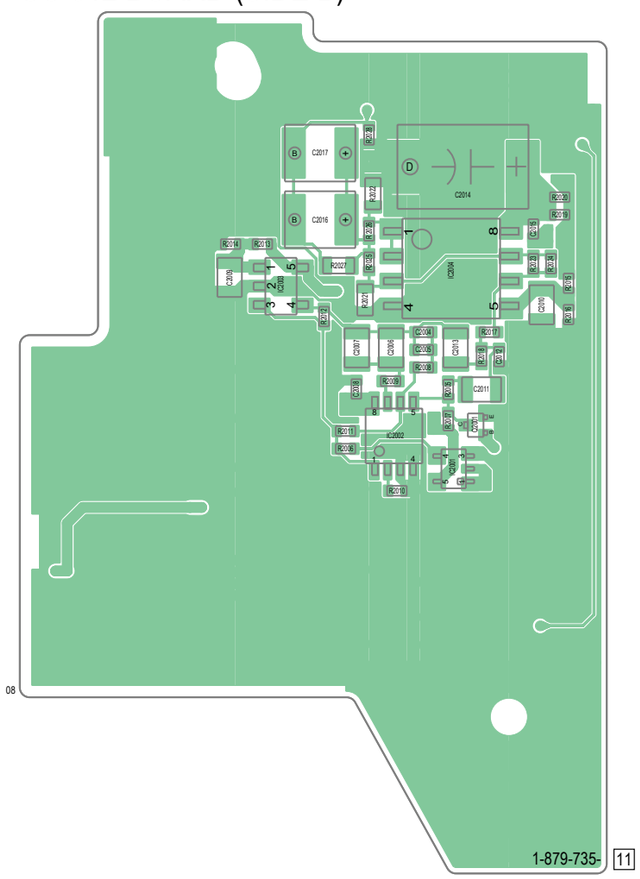

TC-001 BOARD (SIDE A)

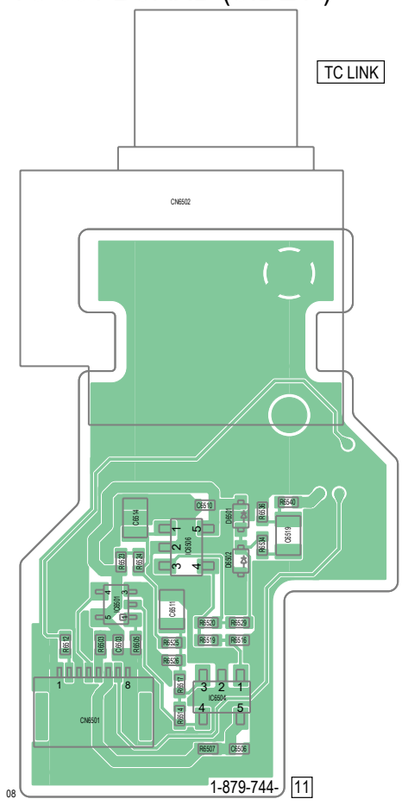

TC-001 BOARD (SIDE B)

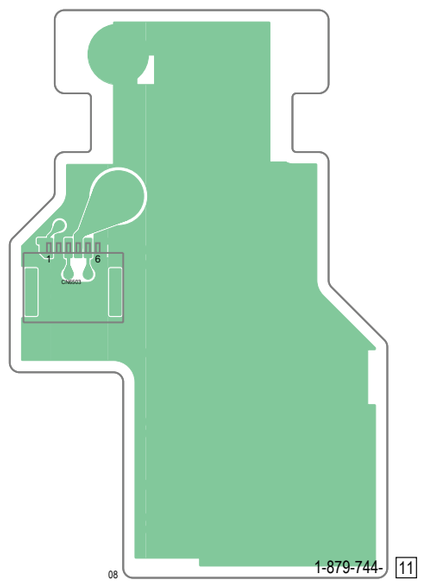

Caution :
Danger of explosion if battery is incorrectly replaced.
Replace only with the same or equivalent type.
Dispose of used batteries according to the instructions.

注意 :
電池の交換は，正しく行わないと破裂する恐れがあります。
電池を交換する場合には必ず同じ型名の電池又は同等品と交換してください。
使用済み電池は，取扱指示に従って処分してください。

Note: Replace the battery holder (BH2001) together when replacing the lithium storage battery (BT2001) on the GC-012 board. (The battery holder removed once cannot be used again.)
When mounting these parts, mount new battery holder first and attach new lithium storage battery next.

ノート:
GC-012基板のリチウム蓄電池（BT2001）を交換する場合はバッテリホルダ（BH2001）も同時に新品に交換して下さい。
（一度使用したバッテリホルダは再使用できません。）
部品取り付けの際は，先にバッテリホルダを取り付けてからリチウム蓄電池を装着して下さい。

VF-179 BOARD (SIDE A)

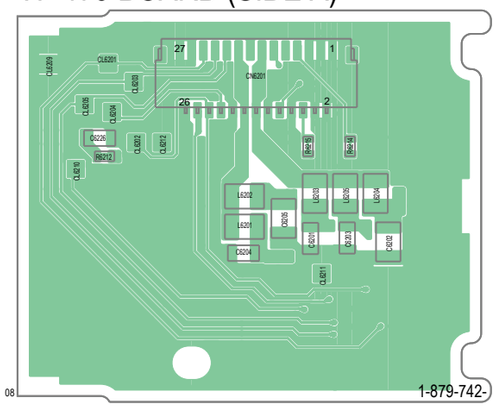

VF-179 BOARD (SIDE B)

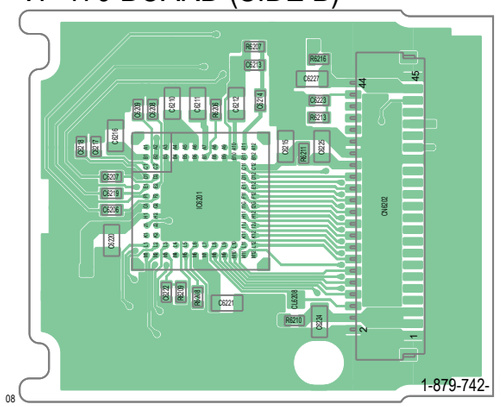

GY-022 BOARD (SIDE A)

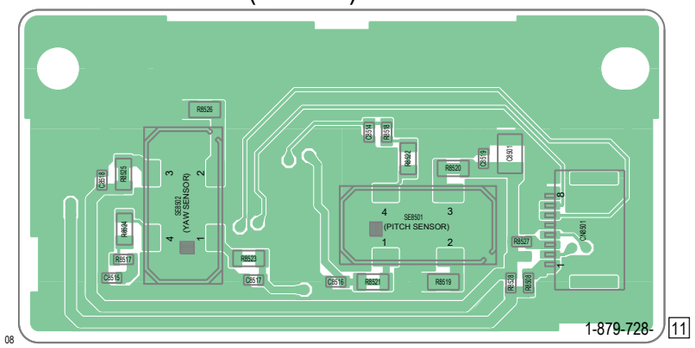

GY-022 BOARD (SIDE B)

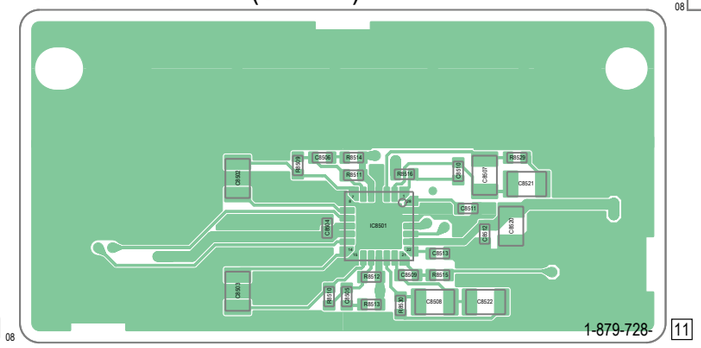

: Uses unleaded solder.

CP-004 BOARD (SIDE A)

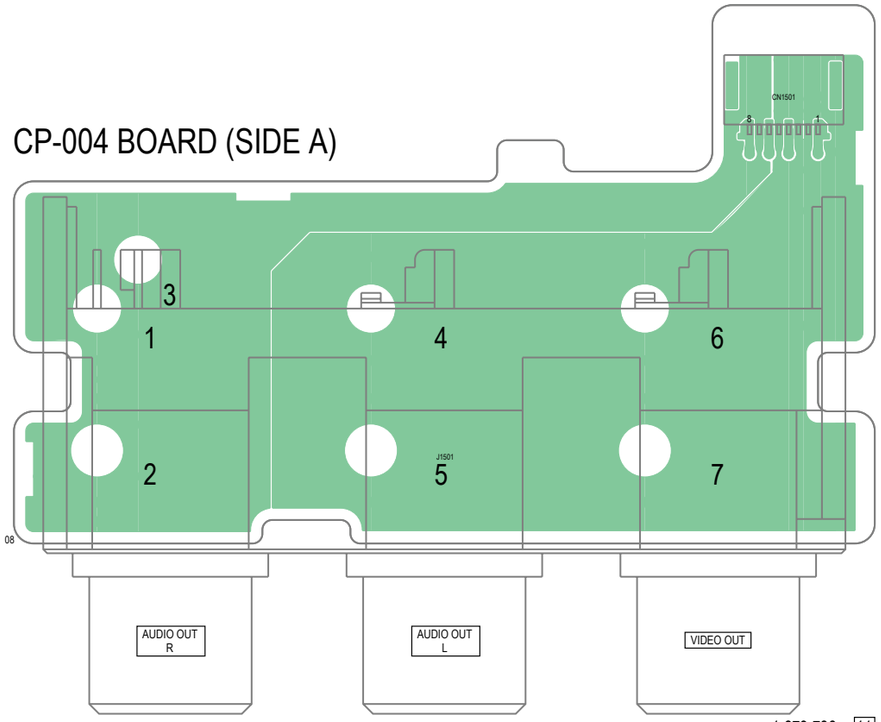

1-879-736- 11

CP-004 BOARD (SIDE B)

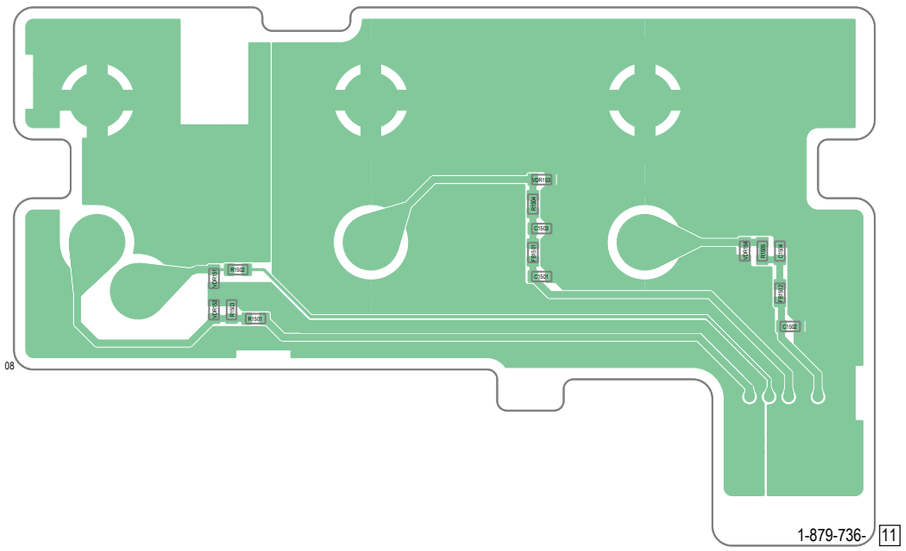

1-879-736- 11

MA-459 BOARD (SIDE A)

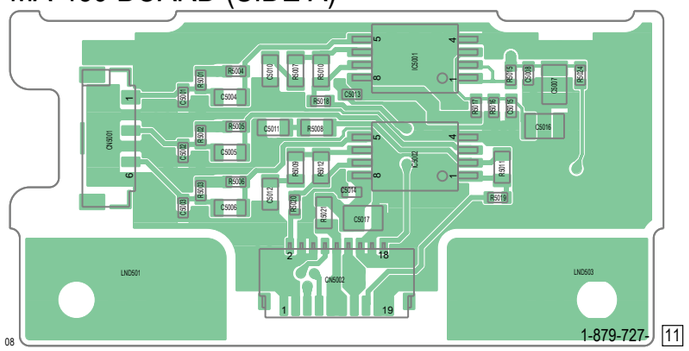

1-879-727- 11

MA-459 BOARD (SIDE B)

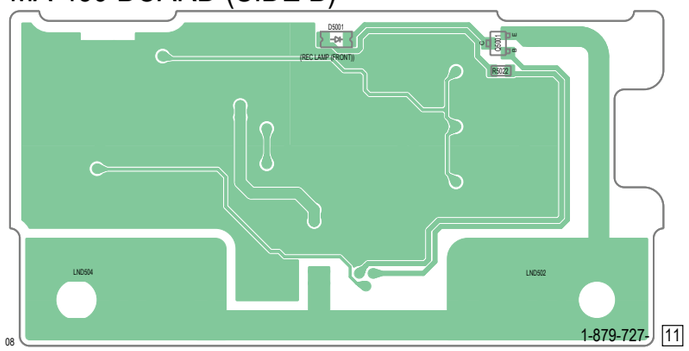

1-879-727- 11

HG-001 BOARD (SIDE A)

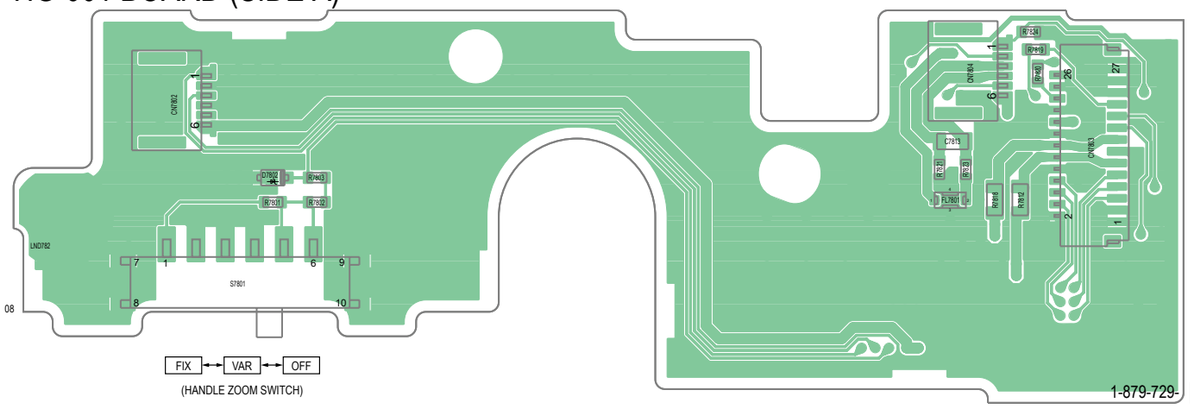

1-879-729- 11

HG-001 BOARD (SIDE B)

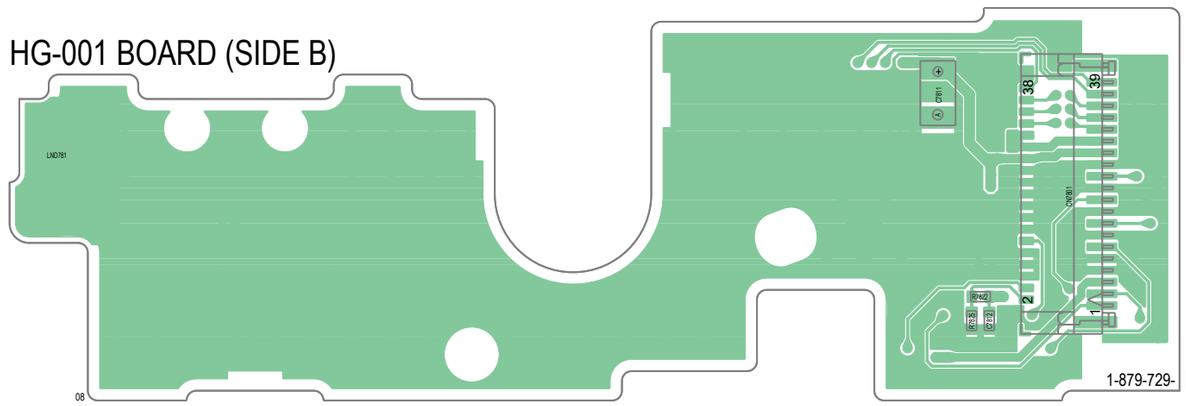

1-879-729- 11

HT-003 BOARD (SIDE A)

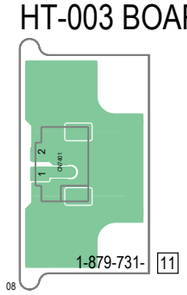

1-879-731- 11

HT-003 BOARD (SIDE B)

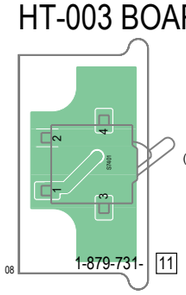

(PANEL REVERSE DET)

1-879-731- 11

: Uses unleaded solder.

CK-218 BOARD (SIDE A)

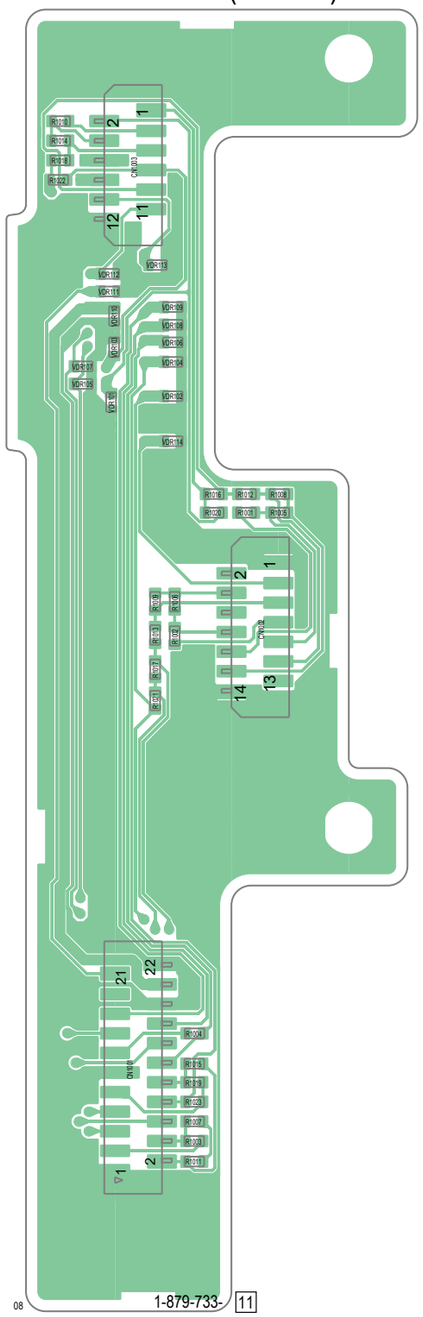

08 1-879-733- 11

CK-218 BOARD (SIDE B)

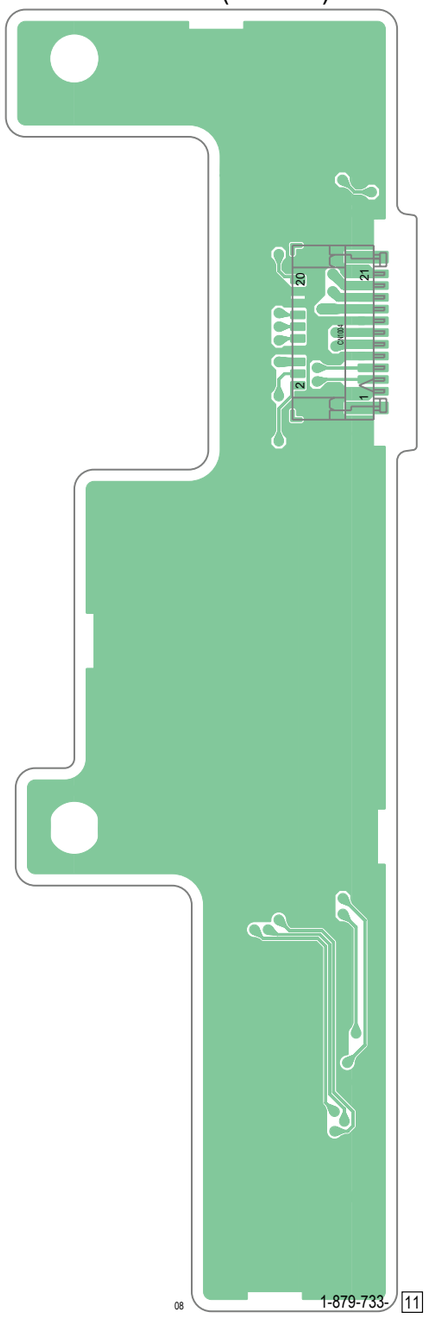

08 1-879-733- 11

AS-063 BOARD (SIDE A)

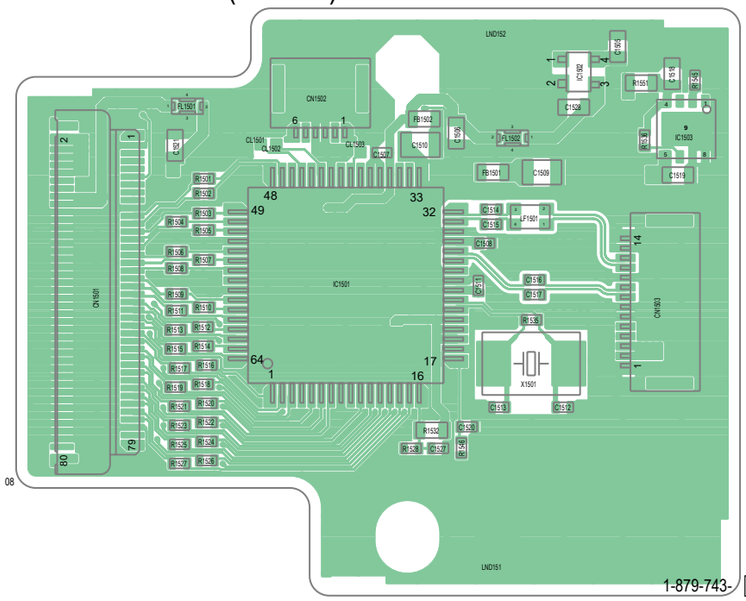

08 1-879-743- 11

AS-063 BOARD (SIDE B)

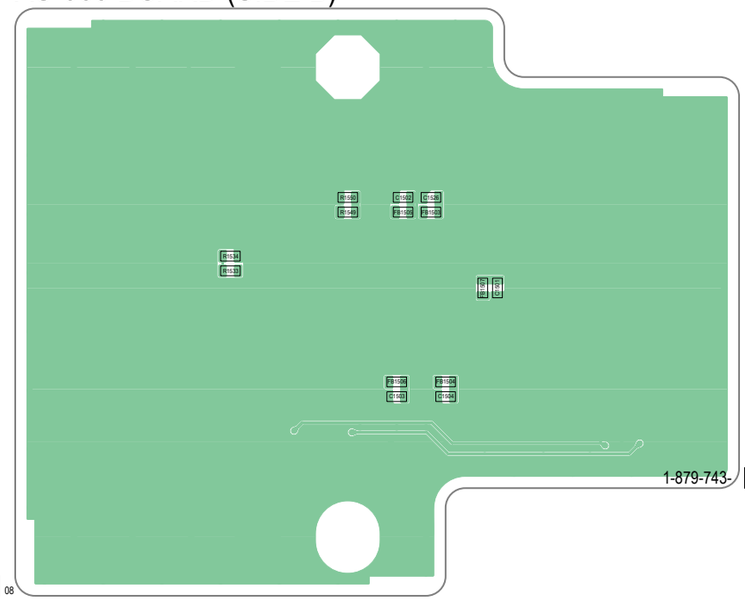

08 1-879-743- 11

HP-156 BOARD (SIDE A)

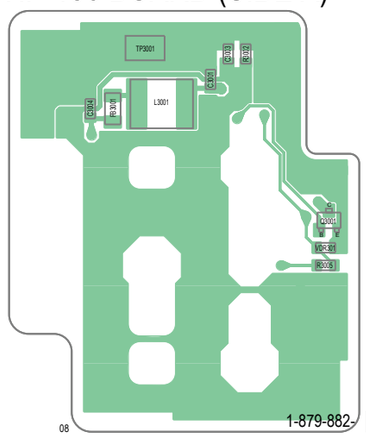

08 1-879-882- 11

HP-156 BOARD (SIDE B)

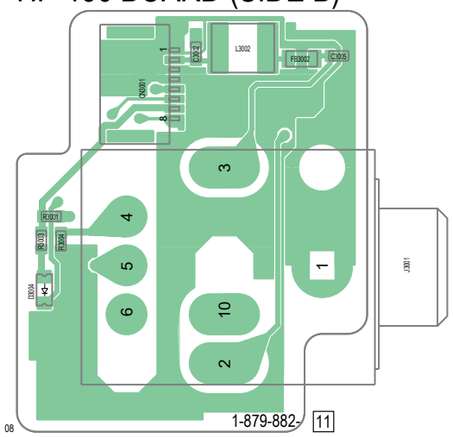

J3001
(HEADPHONE)

08 1-879-882- 11

TS-157 BOARD

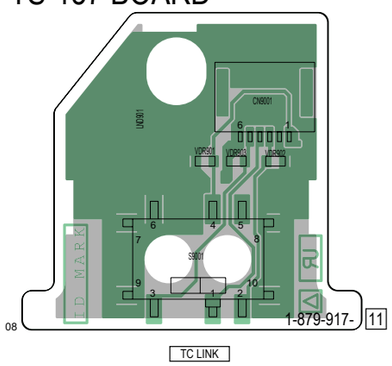

08 1-879-917- 11

TC LINK
IN ↔ OUT

: Uses unleaded solder.

PI-030 BOARD (SIDE A)

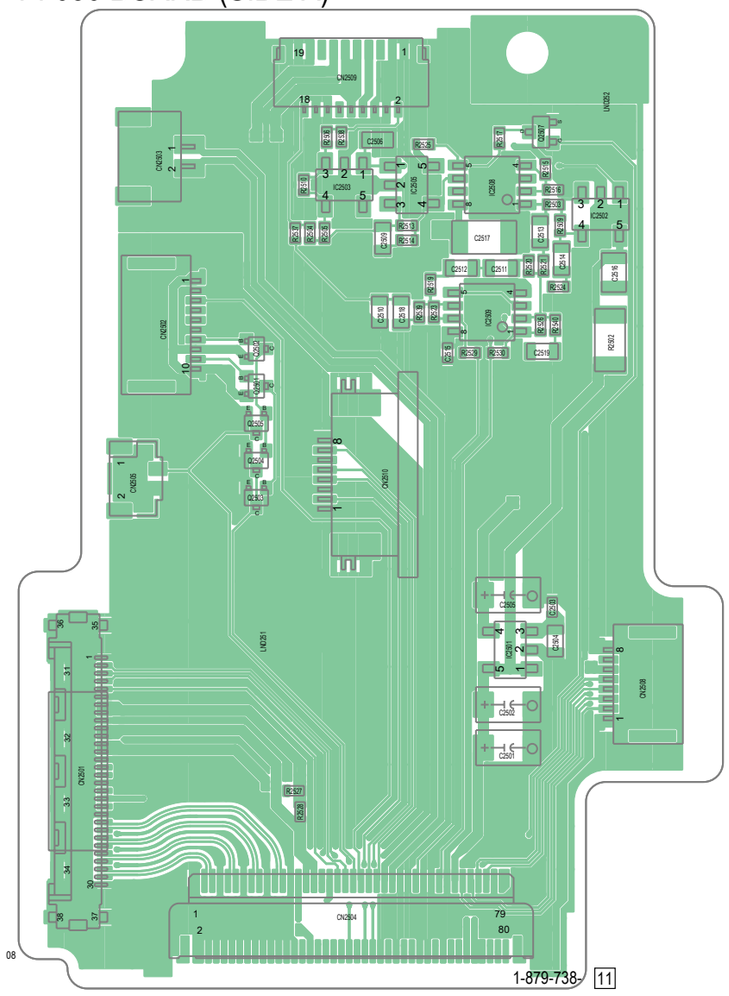

PI-030 BOARD (SIDE B)

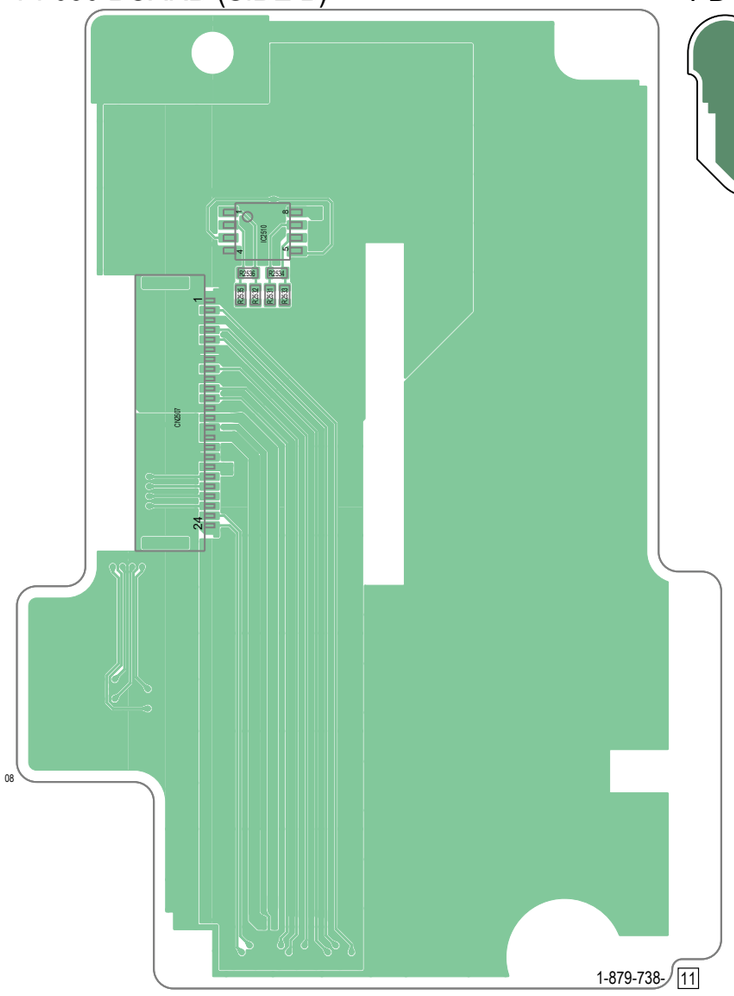

PD-395 BOARD

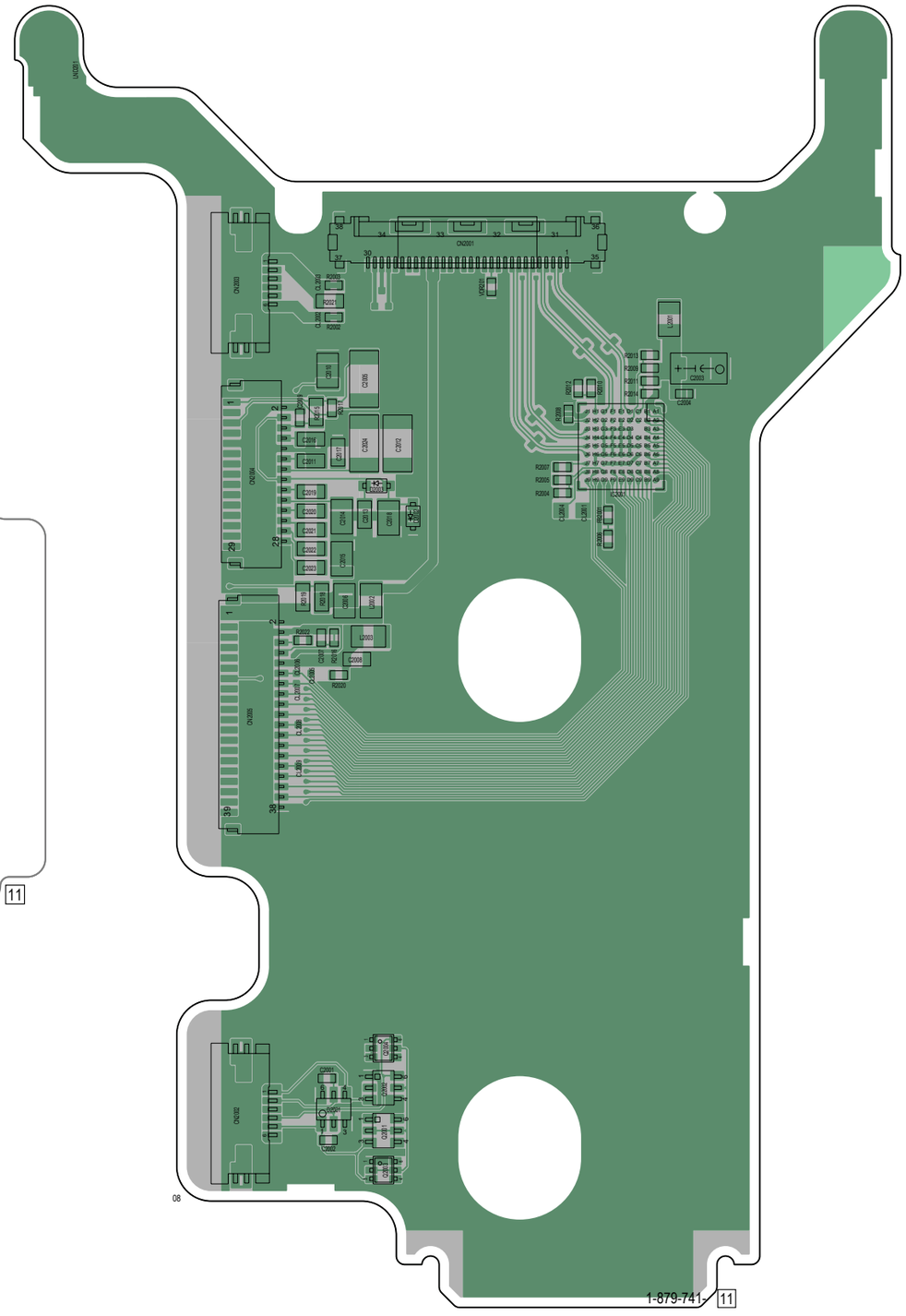

FP-1151 FLEXIBLE BOARD

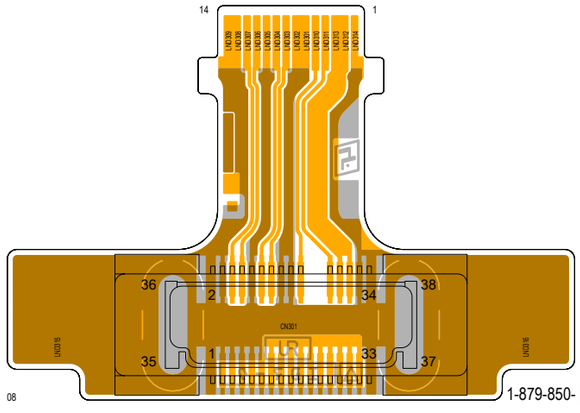

TO SSD UNIT

Note: CN301 is not supplied, but this is included in FP-1151 flexible board.

: Uses unleaded solder.

XL-011 BOARD (SIDE A)

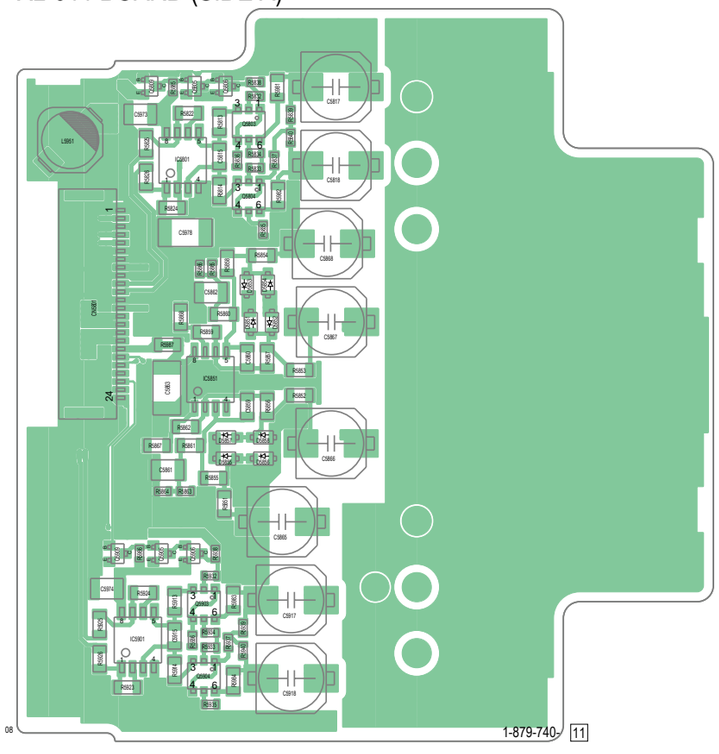

1-879-740- 11

KY-115 BOARD (SIDE A)

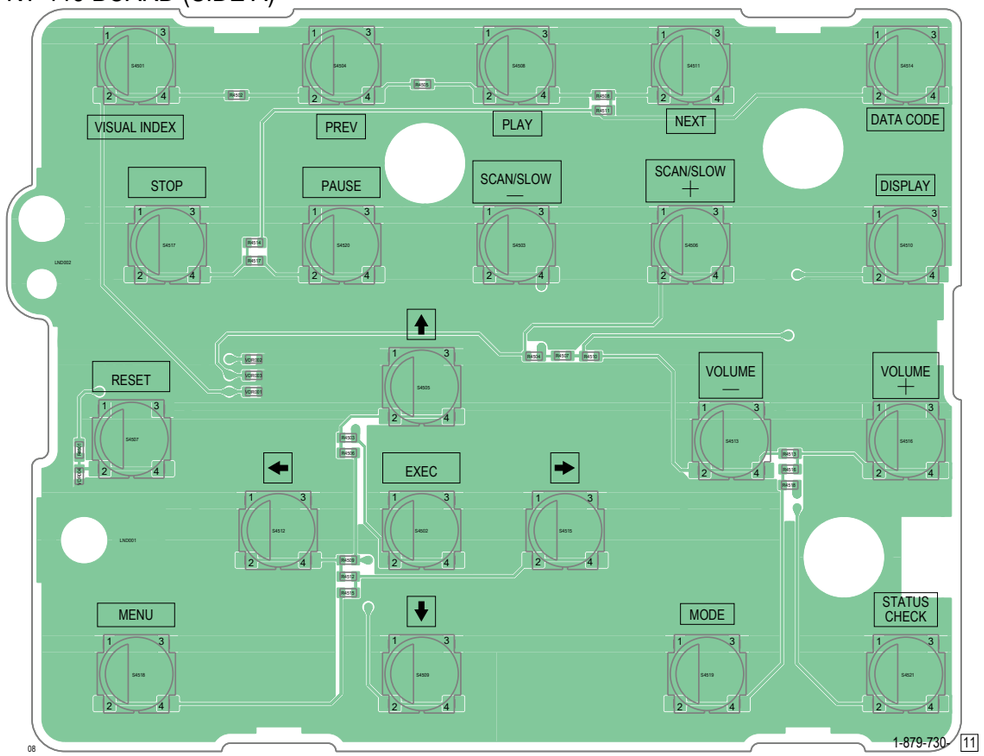

1-879-730- 11

XL-011 BOARD (SIDE B)

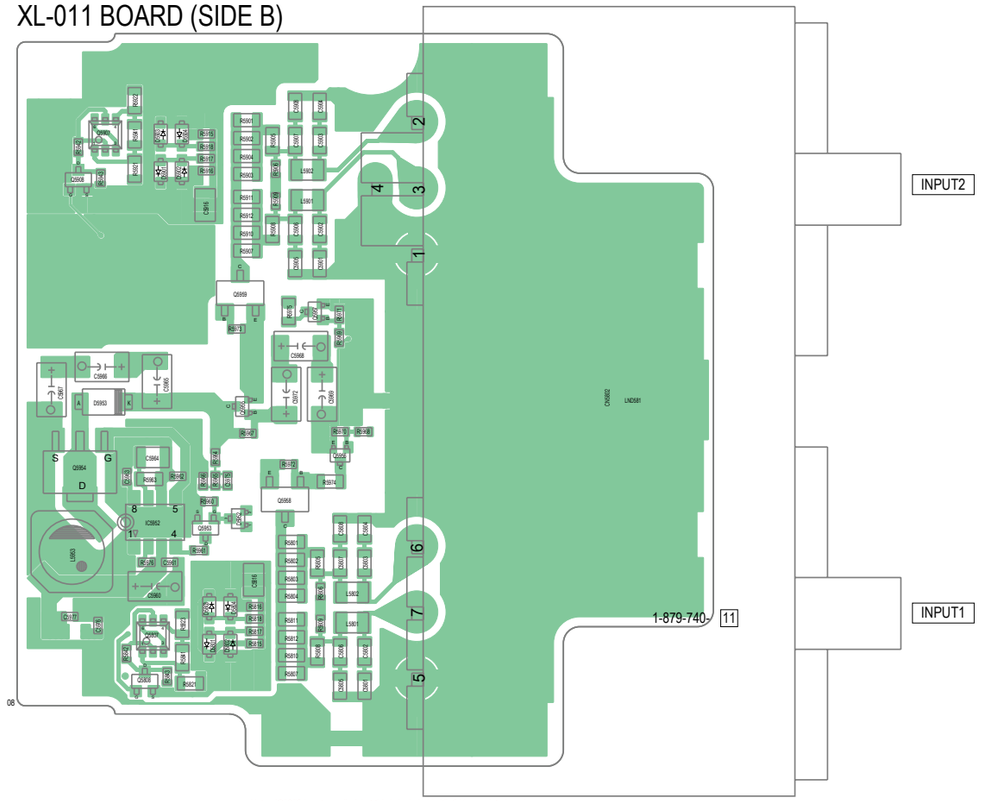

1-879-740- 11

Note: IC5952 is not supplied, but this is included in XL-011 complete board.

KY-115 BOARD (SIDE B)

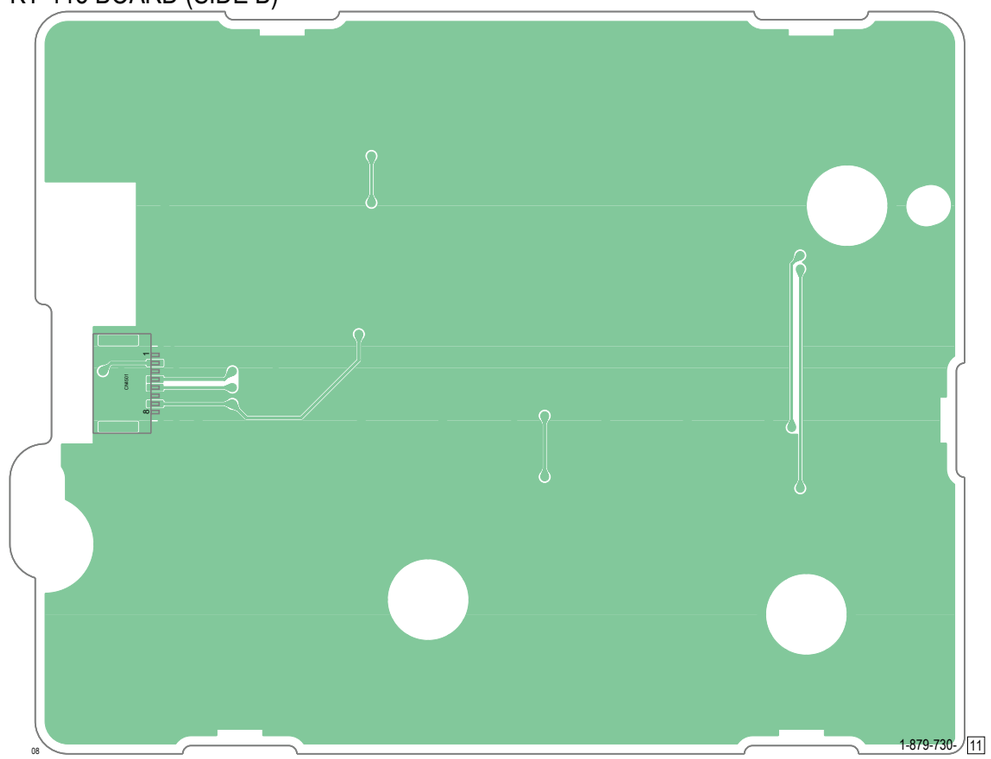

1-879-730- 11

: Uses unleaded solder.

Ver. 1.1 2010.01
The changed portions from
Ver. 1.0 are shown in blue.

MS-424 BOARD (SIDE A)

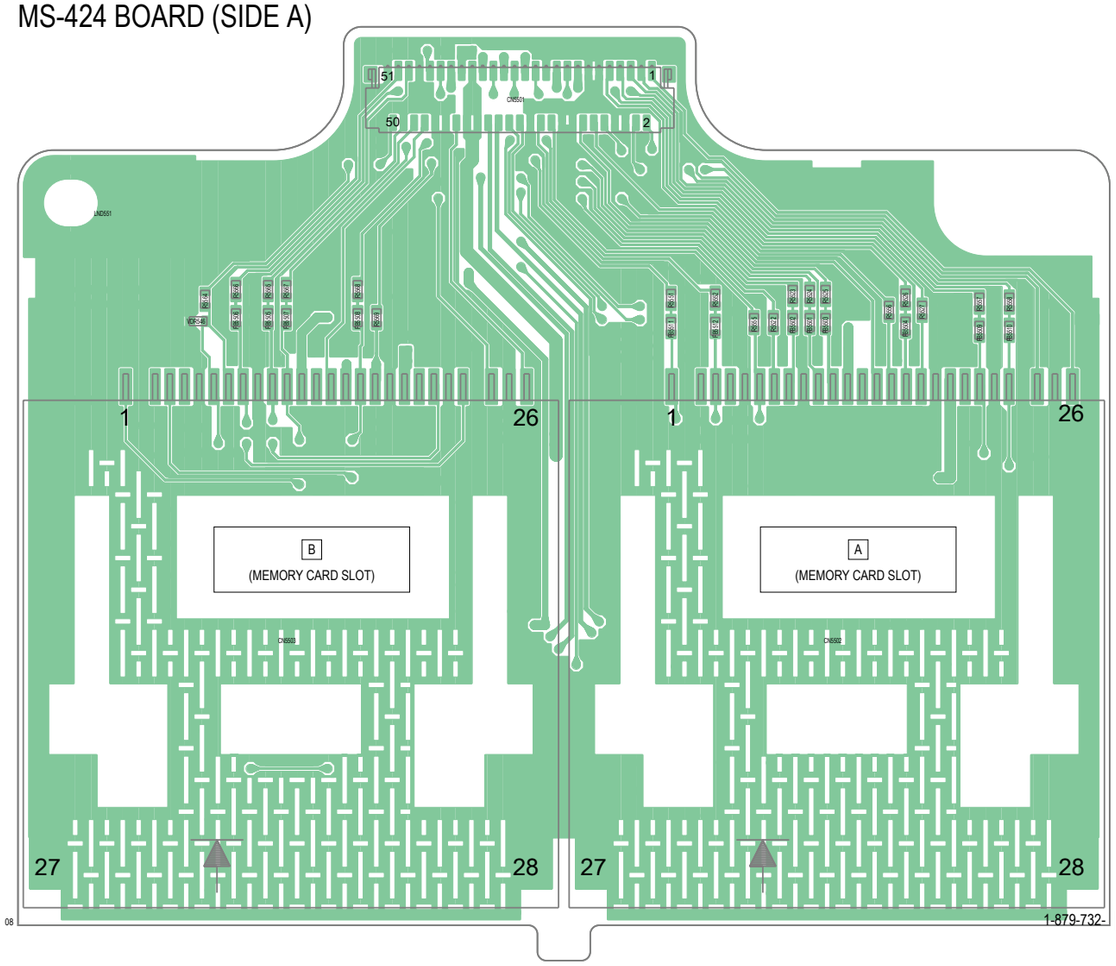

MS-424 BOARD (SIDE B)

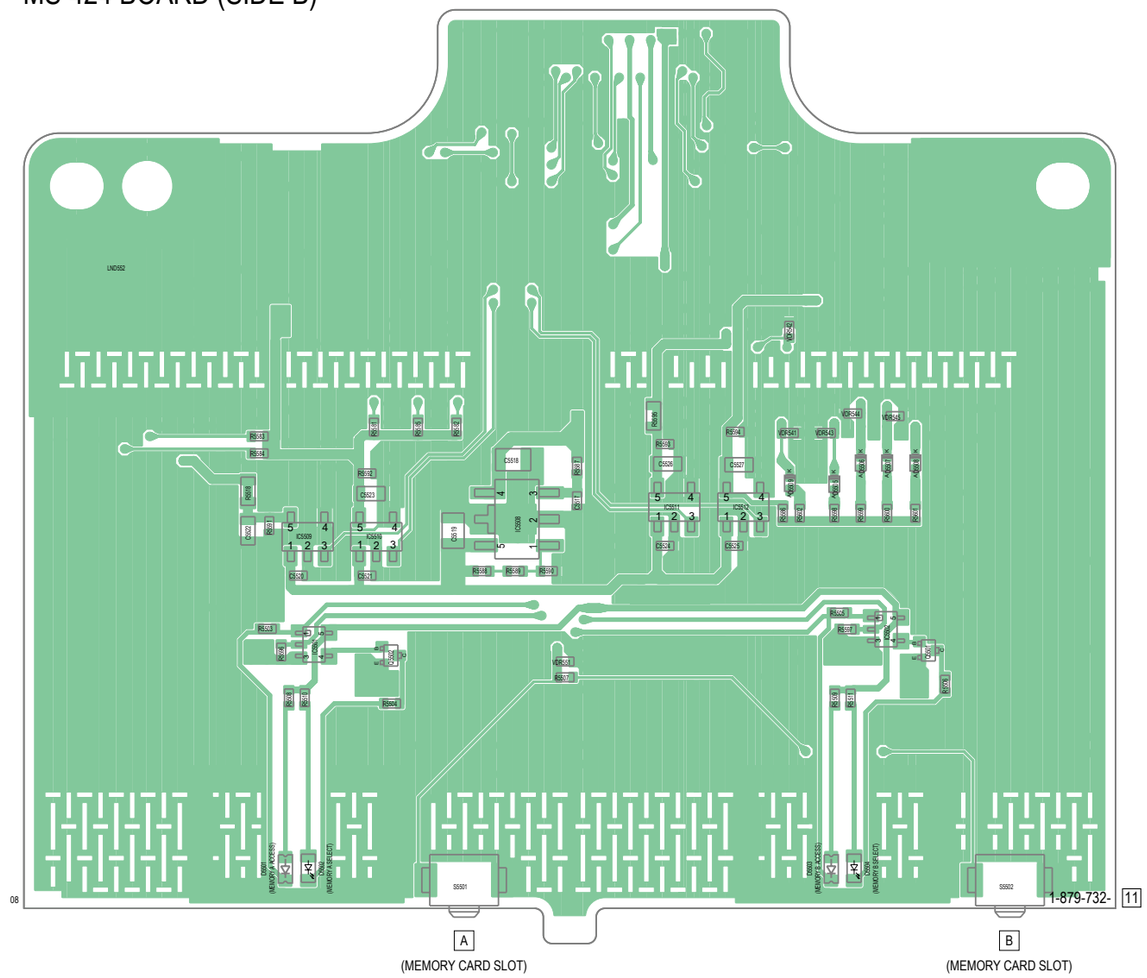

JK-392 BOARD

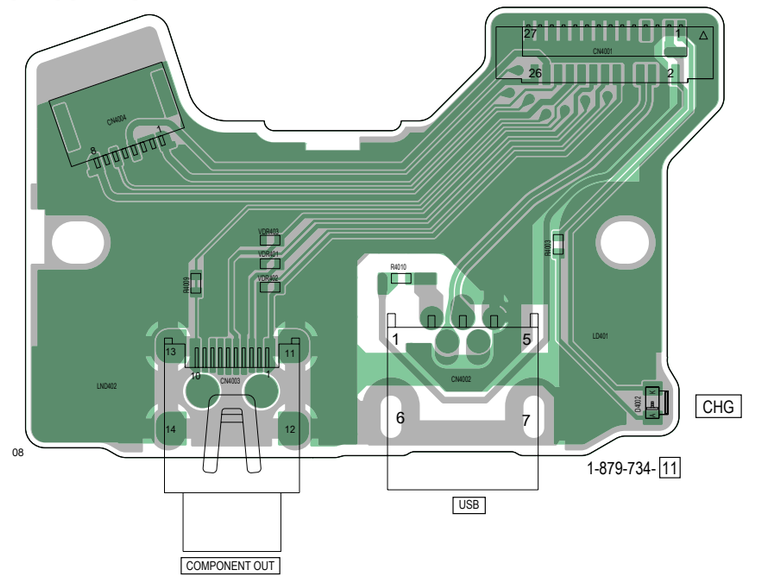

GS-010 BOARD
: EXCEPT NX5C/NX5M

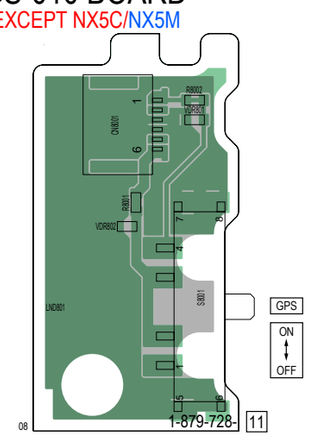

: Uses unleaded solder.

Ver. 1.1 2010.01

The changed portions from
Ver. 1.0 are shown in blue.

FP-1150 FLEXIBLE BOARD

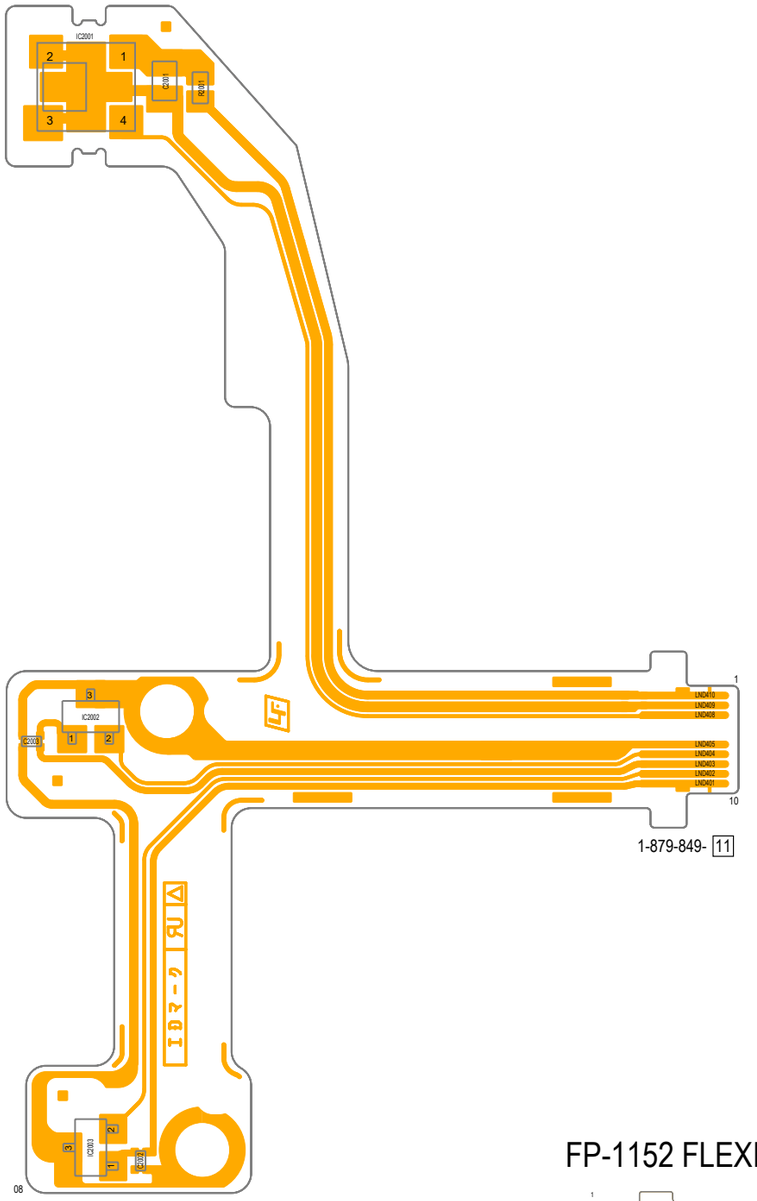

FP-1149 FLEXIBLE BOARD

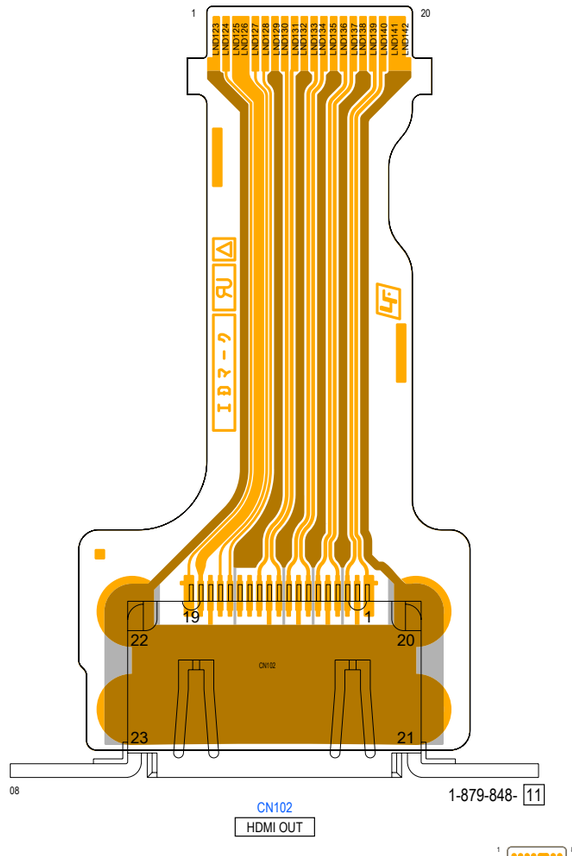

CN102
HDMI OUT

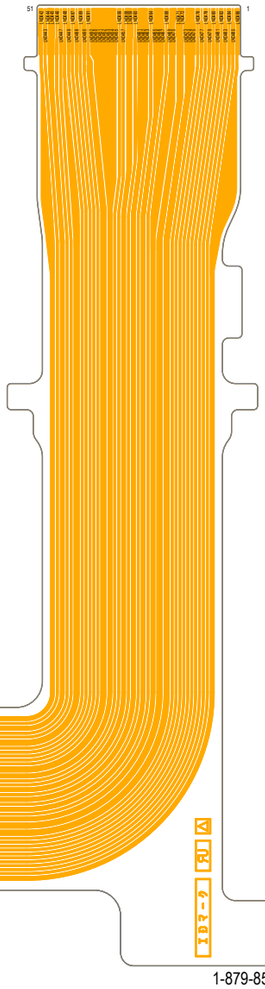

FP-1152 FLEXIBLE BOARD

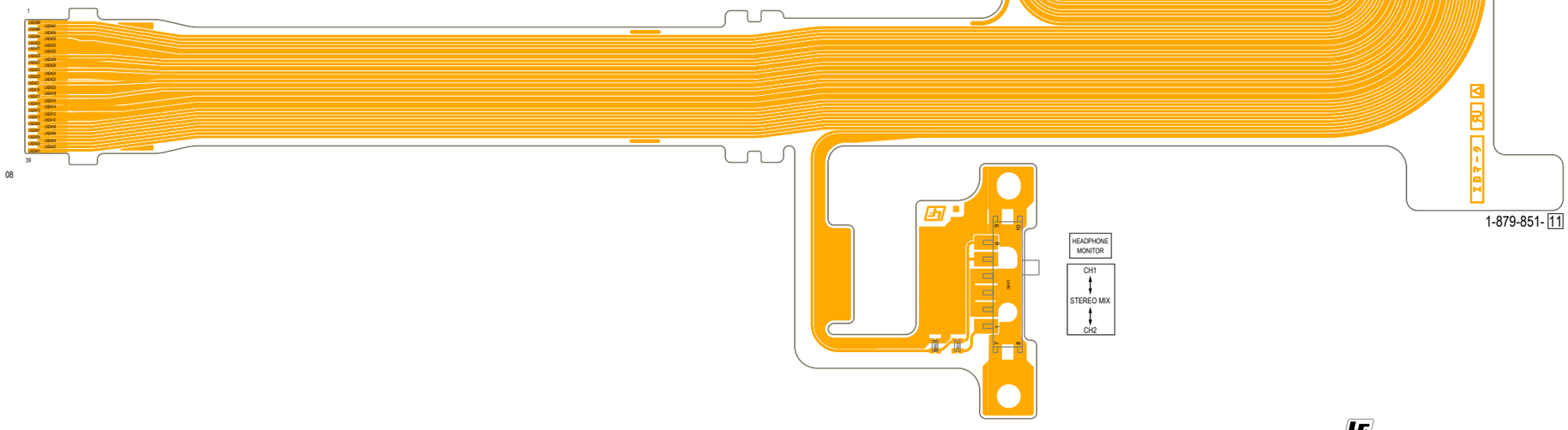

: Uses unleaded solder.